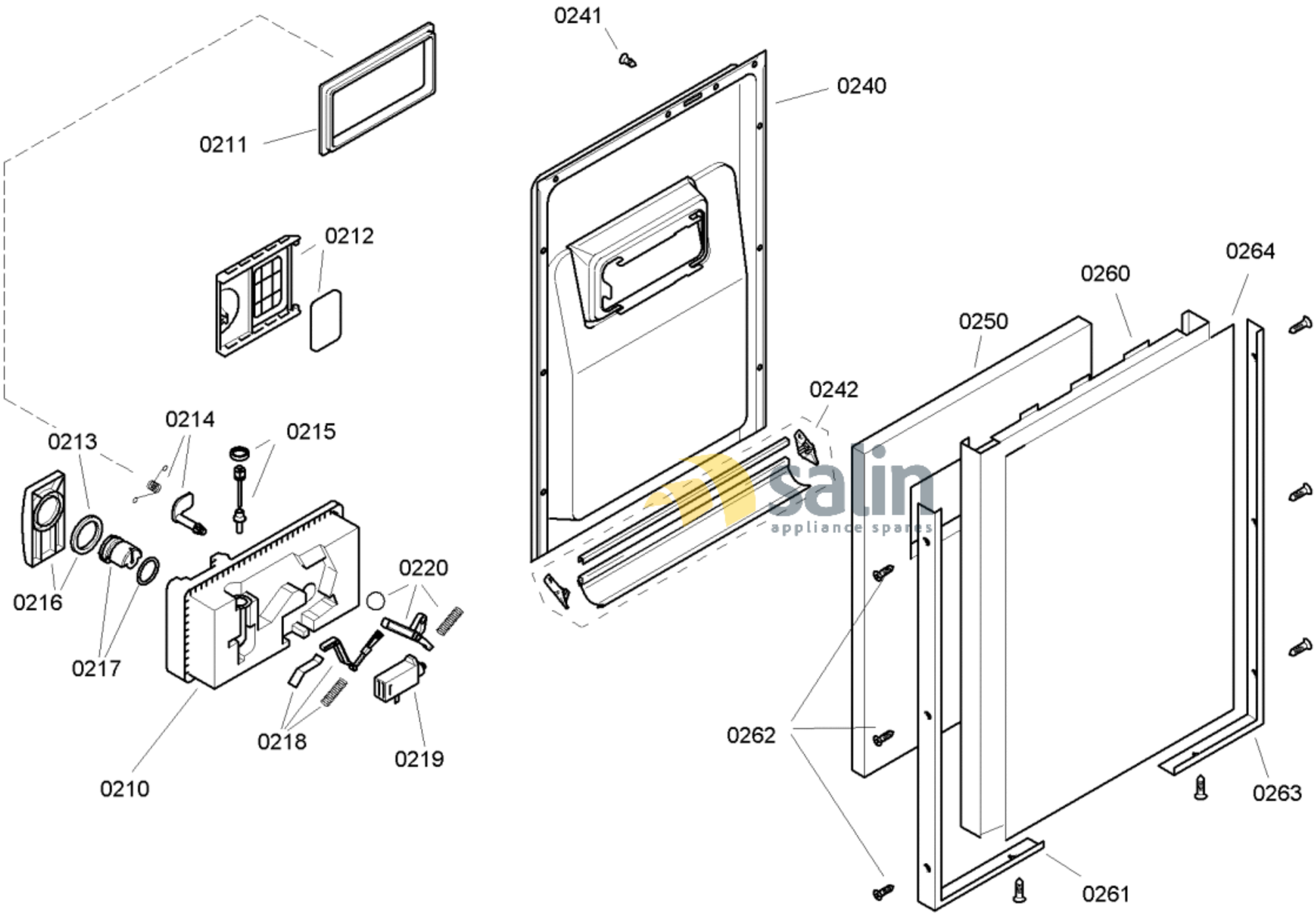

58300000113734 aet 000 c 2/6

FAMILY : SRU55T14EU

MODEL NO: SRU55T14EU/05

Check Position No/Part No or Replacement No

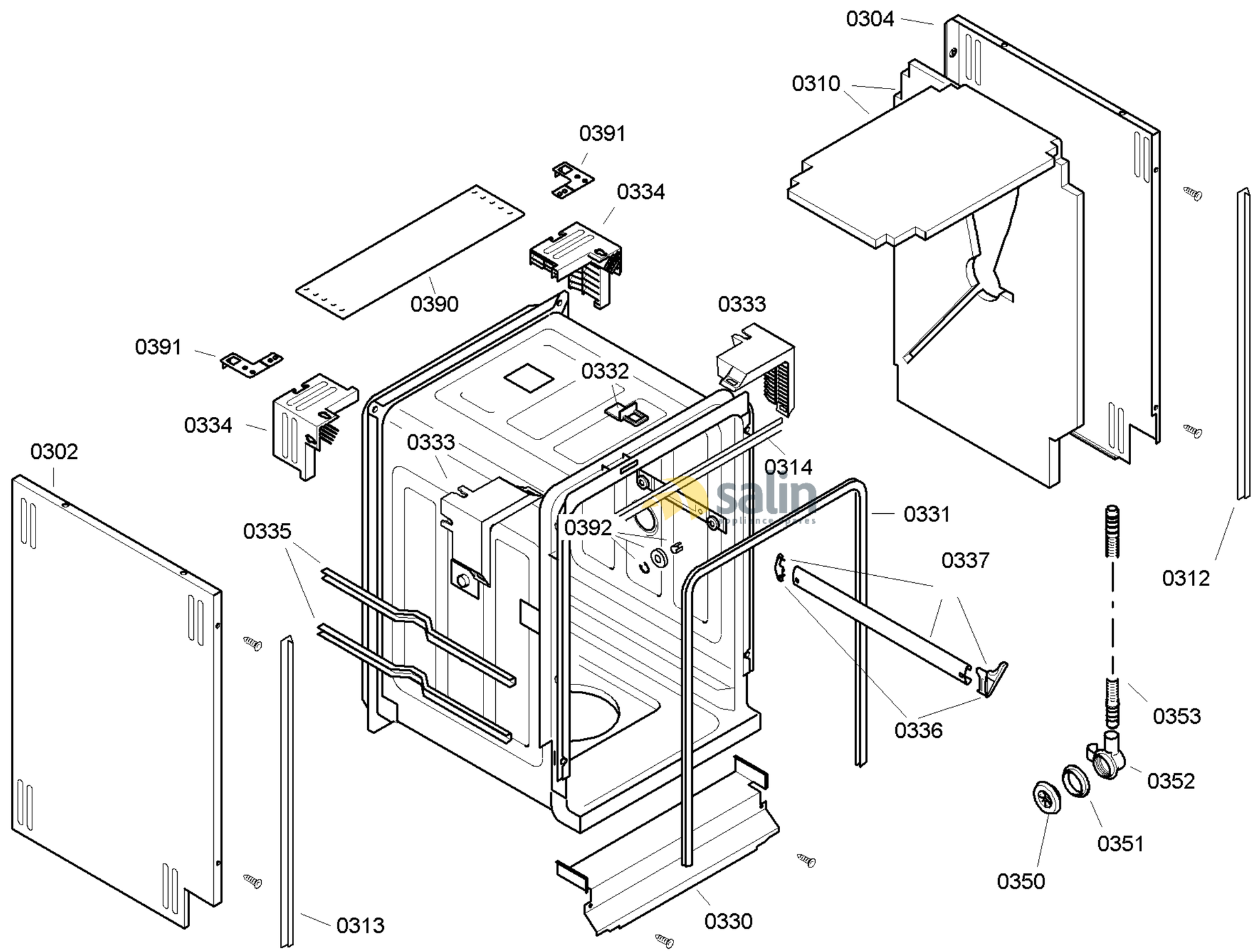

58300000113734 aet 000 c 3/6

FAMILY : SRU55T14EU
MODEL NO: SRU55T14EU/05
Check Position No/Part No or Replacement No

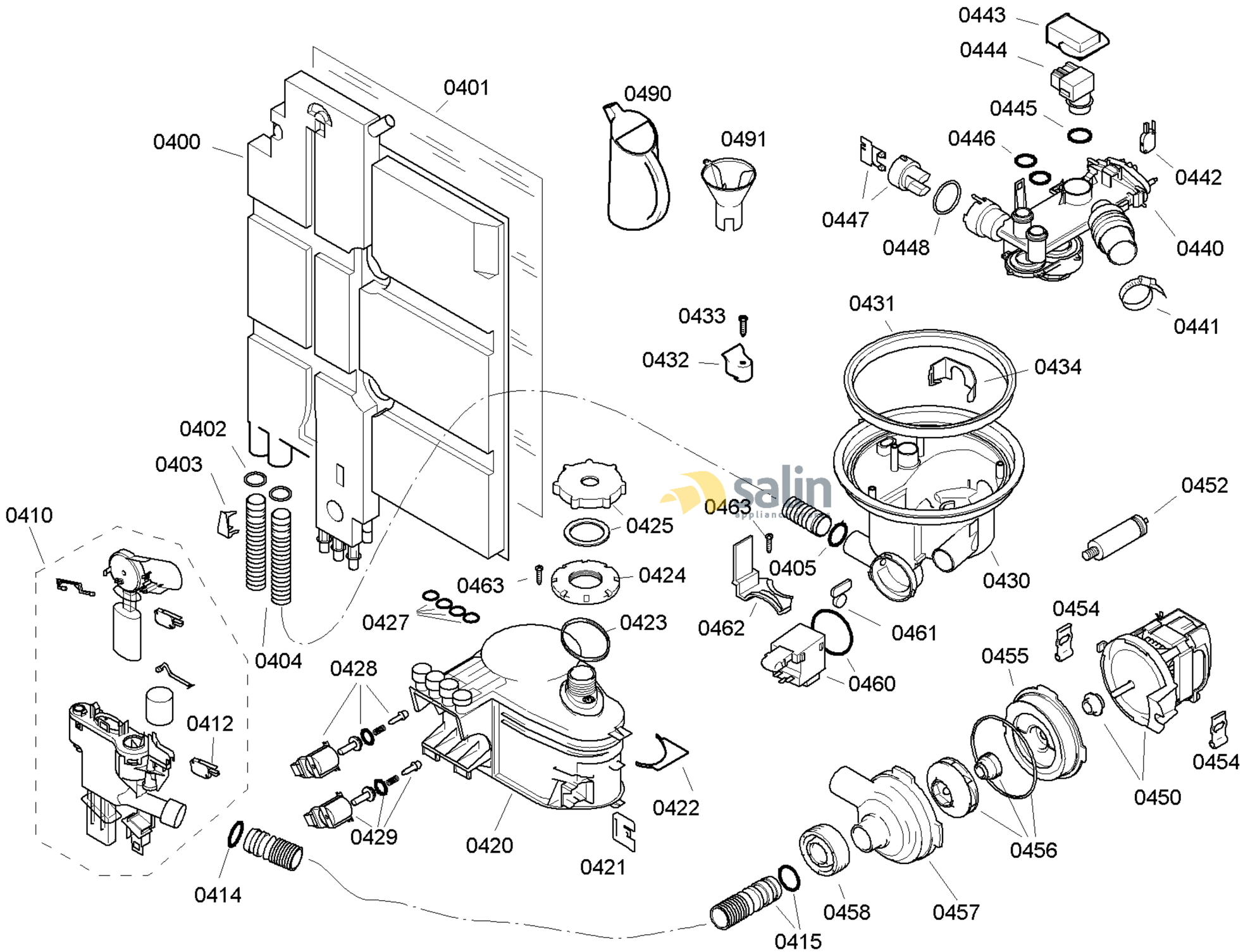

58300000113734 aet 000 c 4/6

FAMILY : SRU55T14EU
MODEL NO: SRU55T14EU/05
Check Position No/Part No or Replacement No

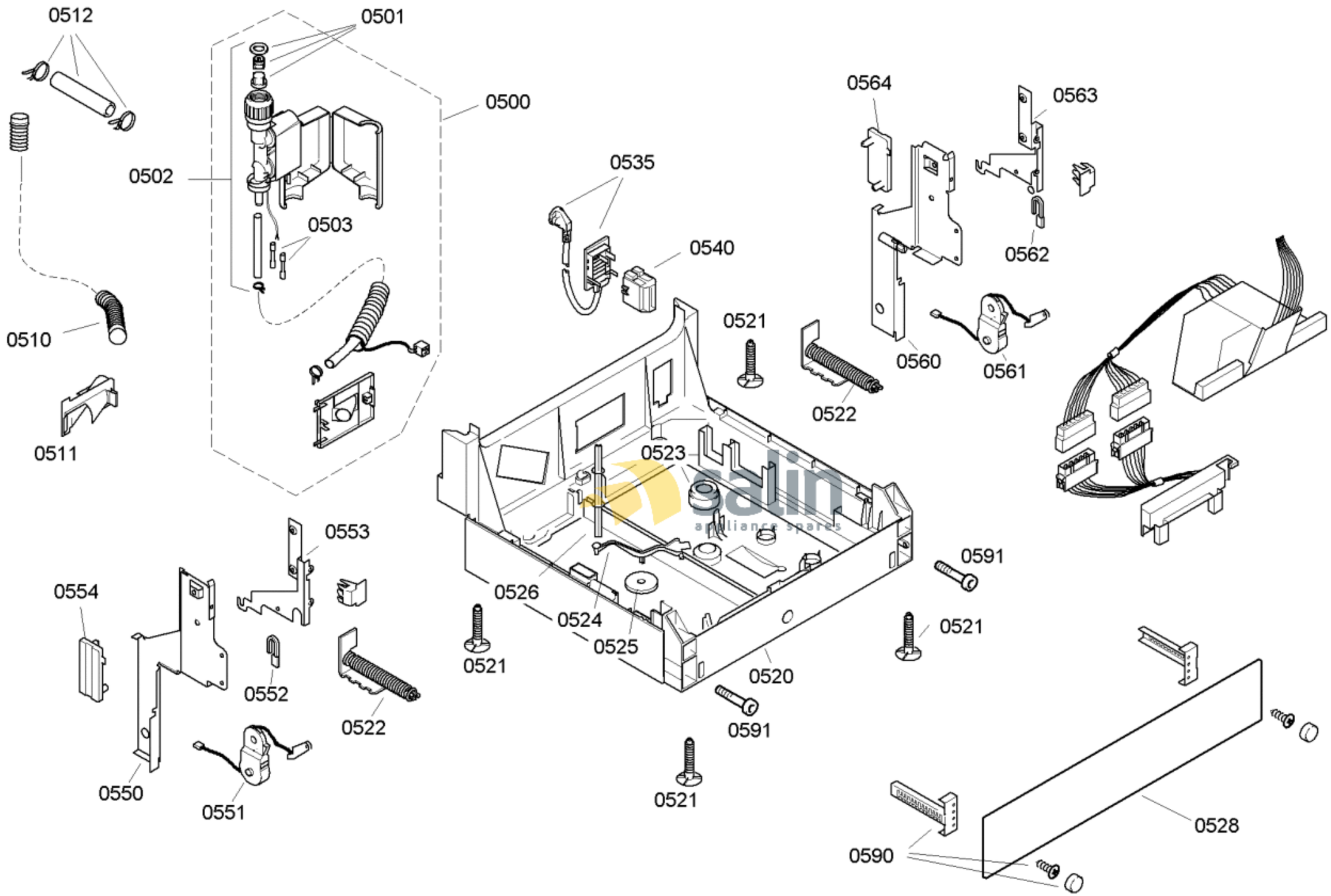

58300000113734 aet 000 c 5/6

FAMILY : SRU55T14EU

MODEL NO: SRU55T14EU/05

Check Position No/Part No or Replacement No

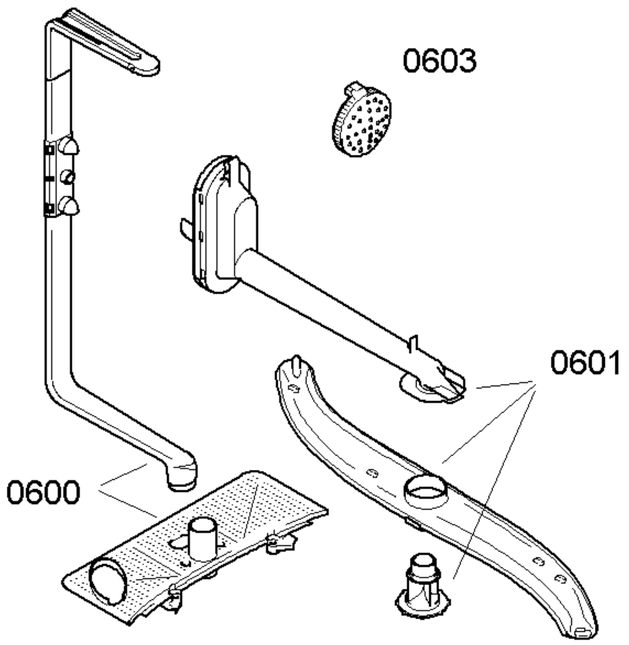

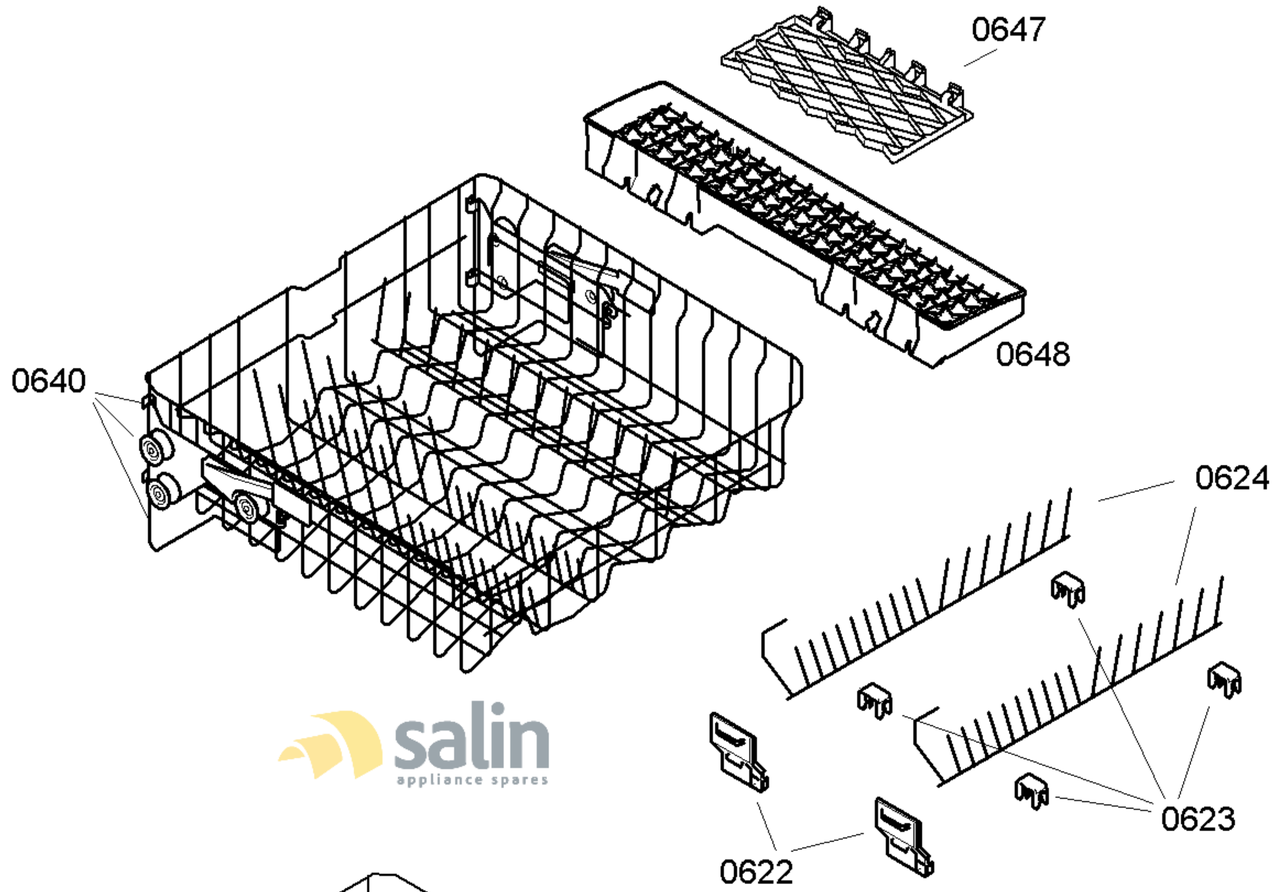

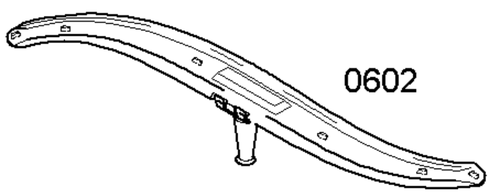

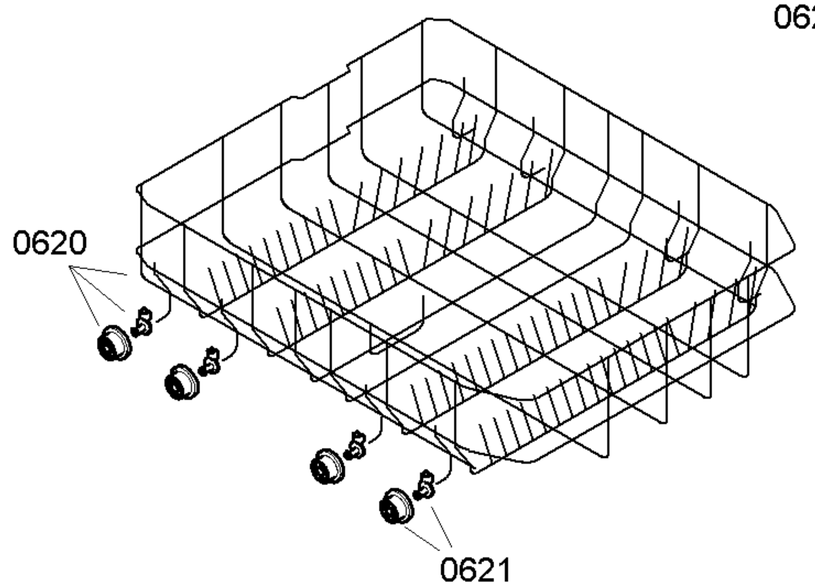

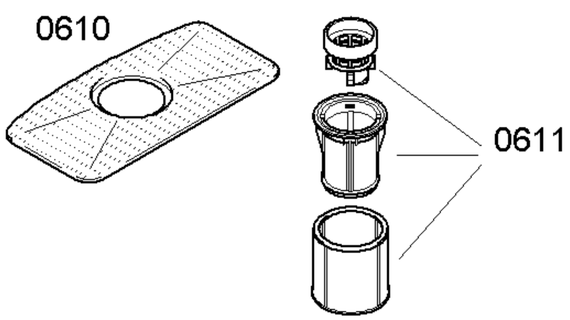

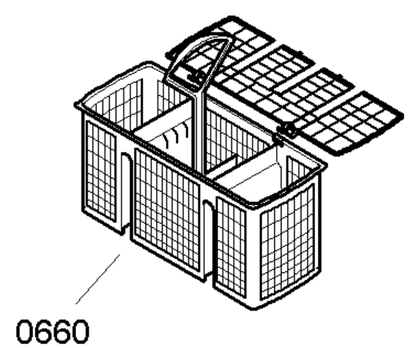

salin
appliance spares

58300000113734 aet 000 c 6/6

FAMILY : SRU55T14EU
MODEL NO: SRU55T14EU/05
Check Position No/Part No or Replacement No