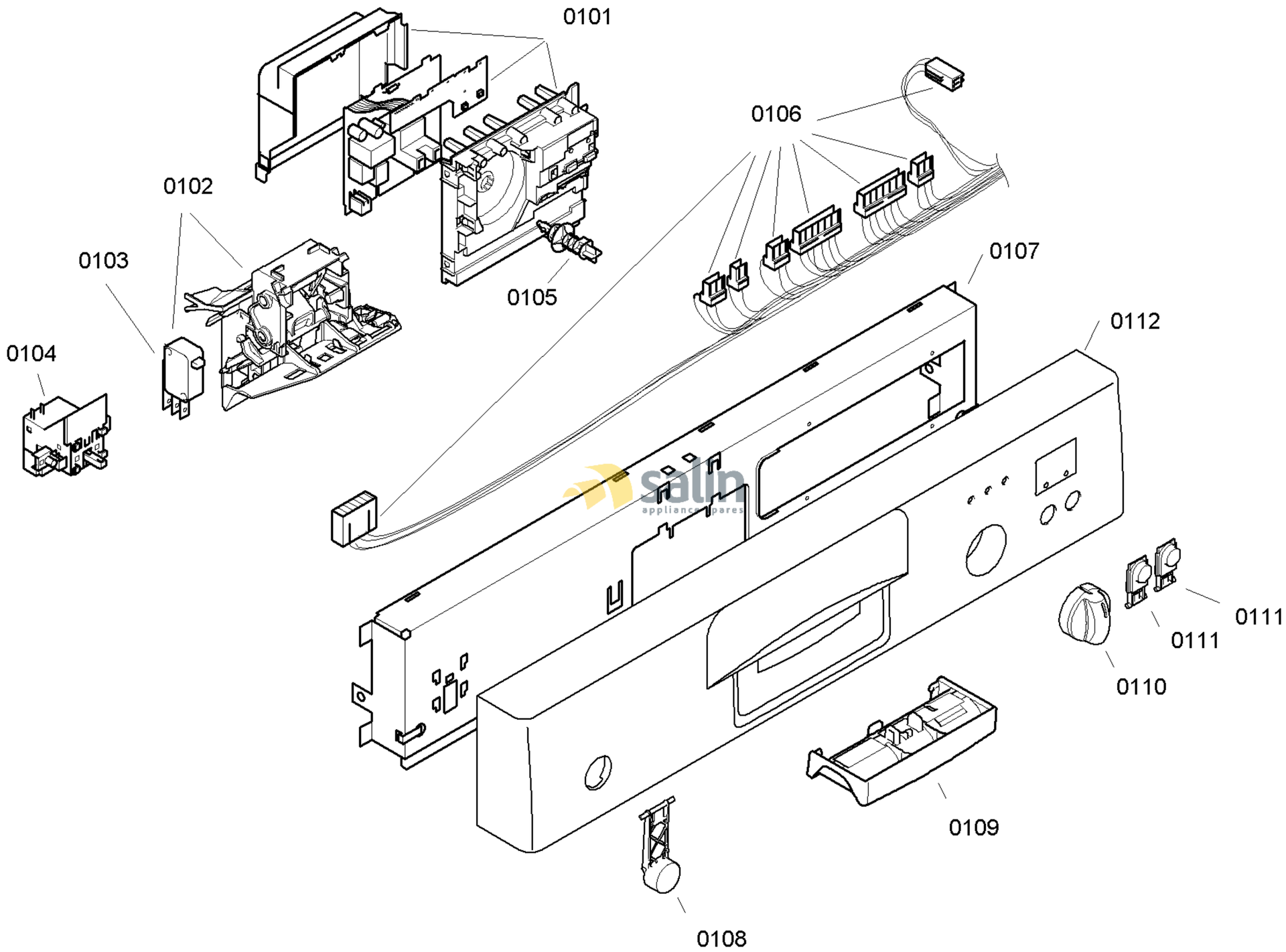

58300000128729 aet 000 a 1/6

FAMILY : SGS56E32EU
MODEL NO: SGS56E32EU/01
Check Position No/Part No or Replacement No

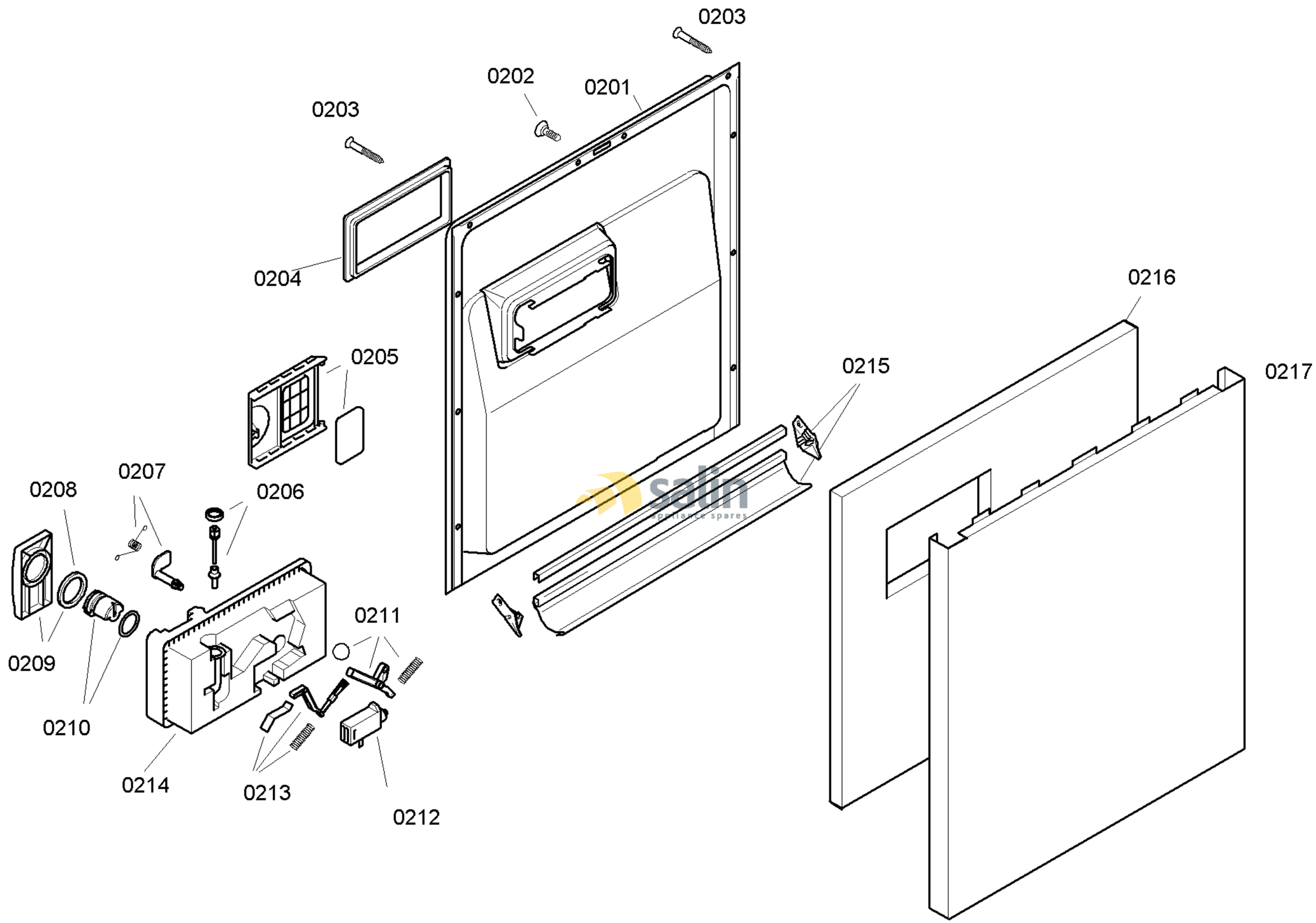

58300000128729 aet 000 a 2/6

FAMILY : SGS56E32EU
MODEL NO: SGS56E32EU/01
Check Position No/Part No or Replacement No

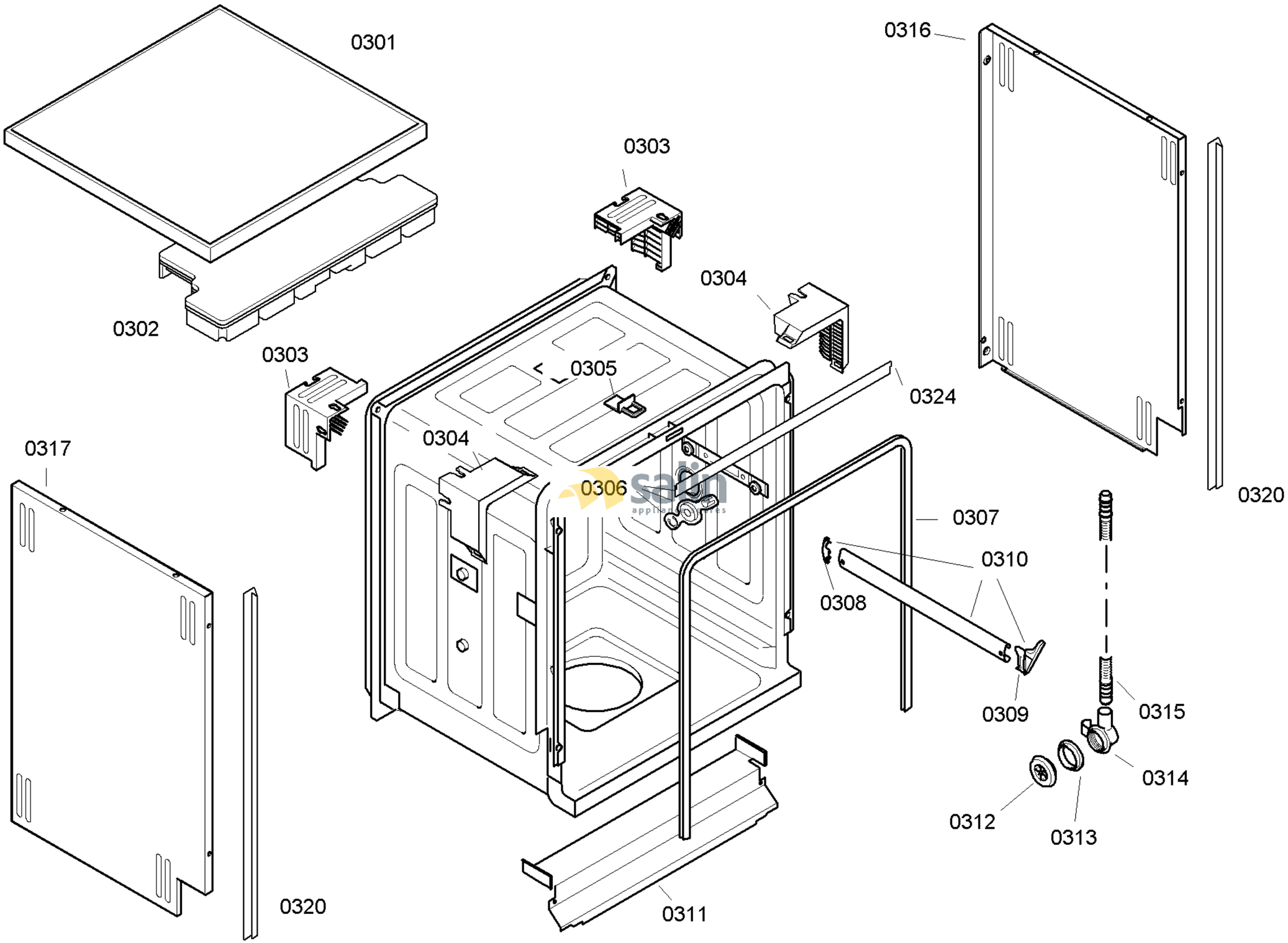

58300000128729 aet 000 a 3/6

FAMILY : SGS56E32EU
MODEL NO: SGS56E32EU/01
Check Position No/Part No or Replacement No

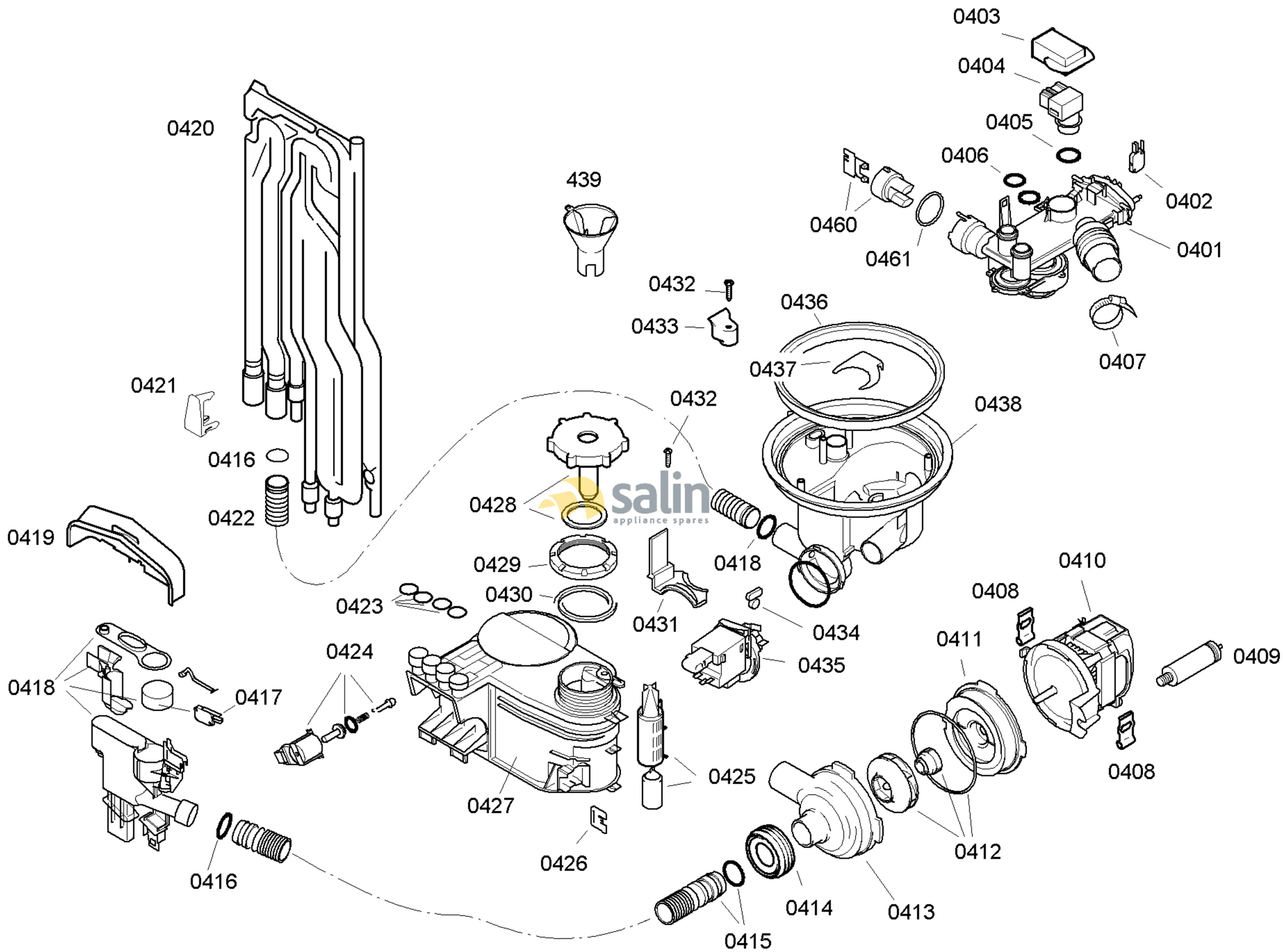

58300000128729 aet 000 a 4/6

FAMILY : SGS56E32EU
MODEL NO: SGS56E32EU/01
Check Position No/Part No or Replacement No

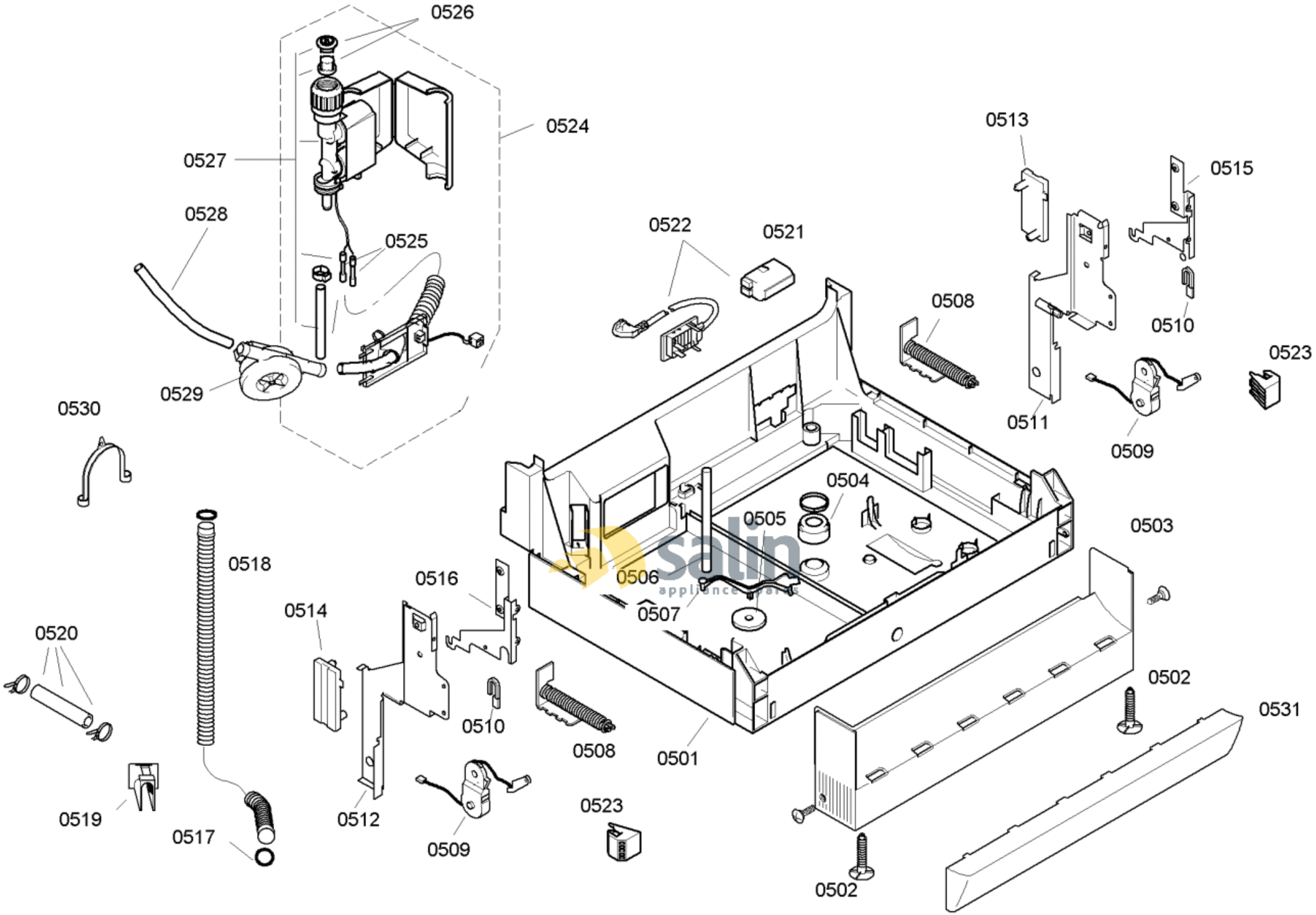

58300000128729 aet 000 a 5/6

FAMILY : SGS56E32EU

MODEL NO: SGS56E32EU/01

Check Position No/Part No or Replacement No

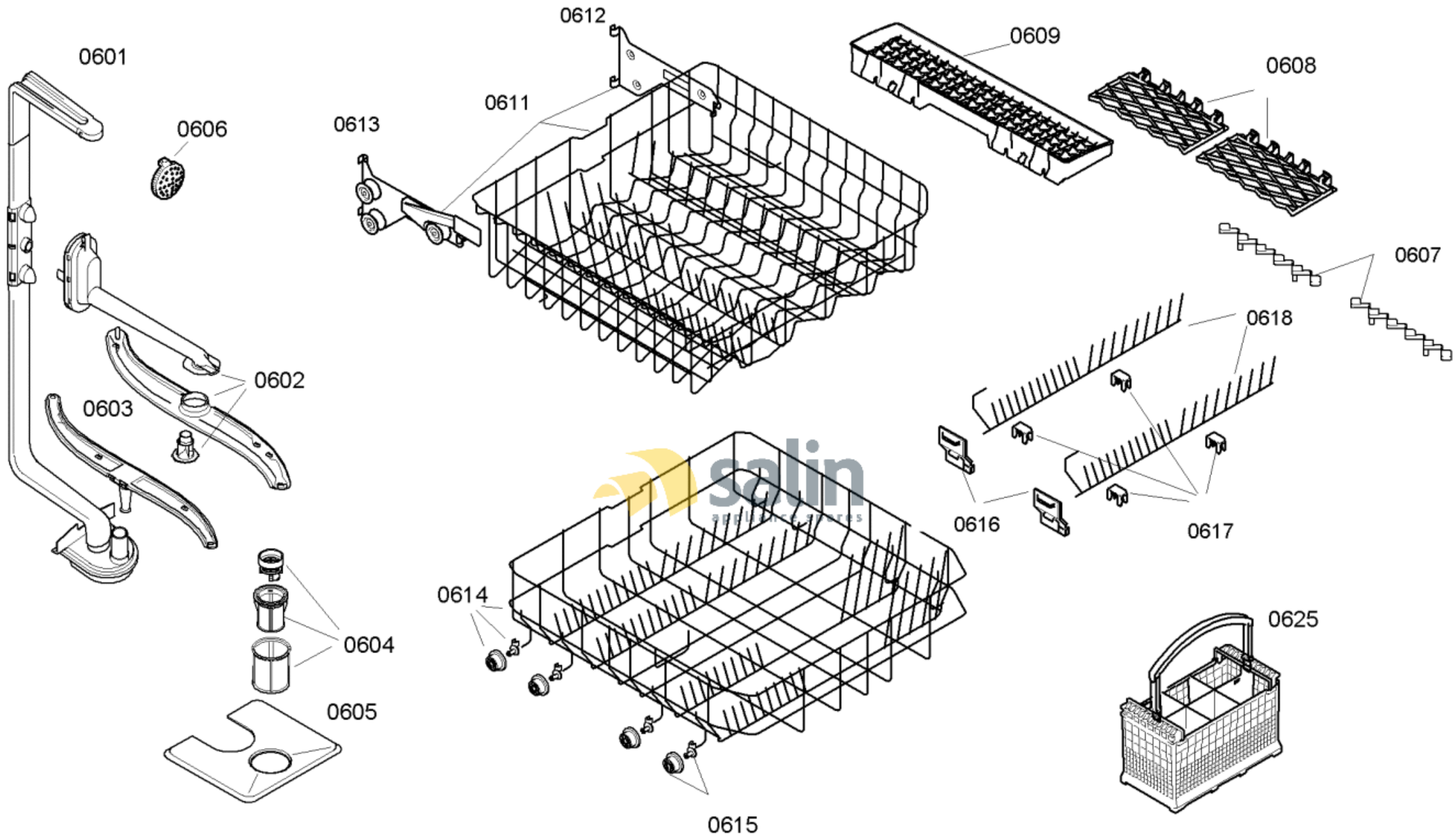

58300000128729 aet 000 a 6/6

FAMILY : SGS56E32EU

MODEL NO: SGS56E32EU/01

Check Position No/Part No or Replacement No