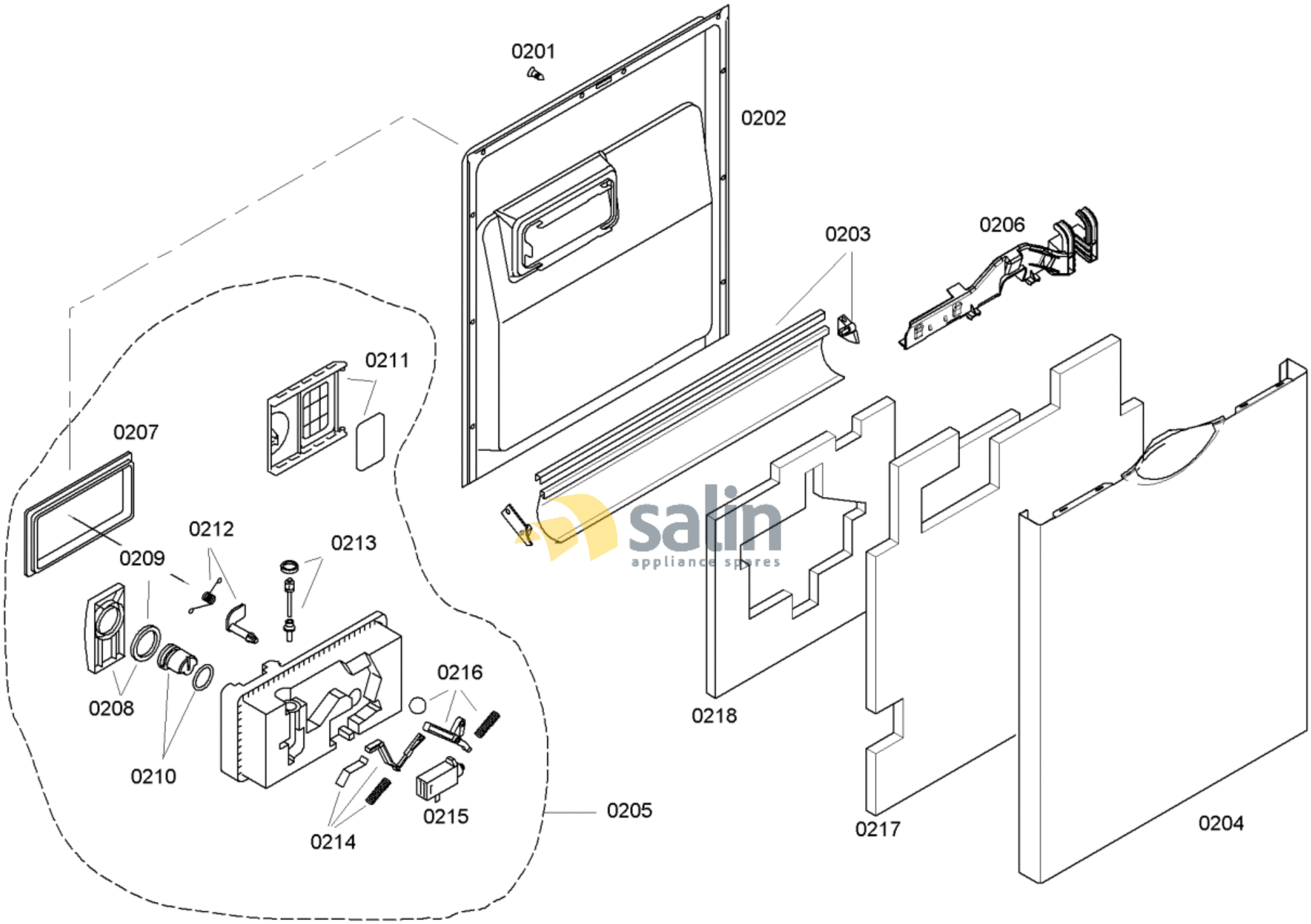


58300000125458 aet 000 a 2/6

FAMILY : SHE46C06UC

MODEL NO: SHE46C06UC/46

Check Position No/Part No or Replacement No

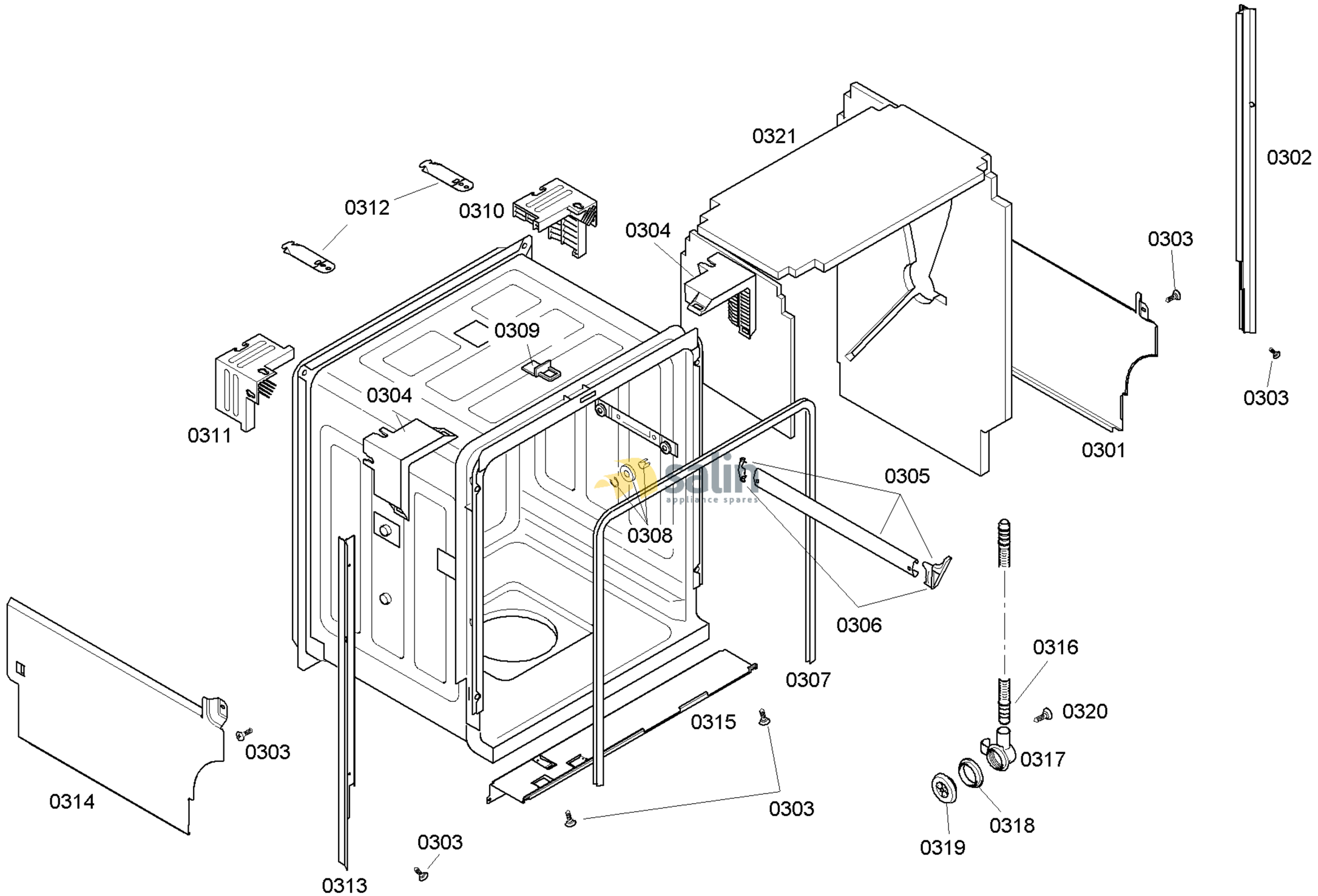


58300000125458 aet 000 a 3/6

FAMILY : SHE46C06UC
MODEL NO: SHE46C06UC/46
Check Position No/Part No or Replacement No

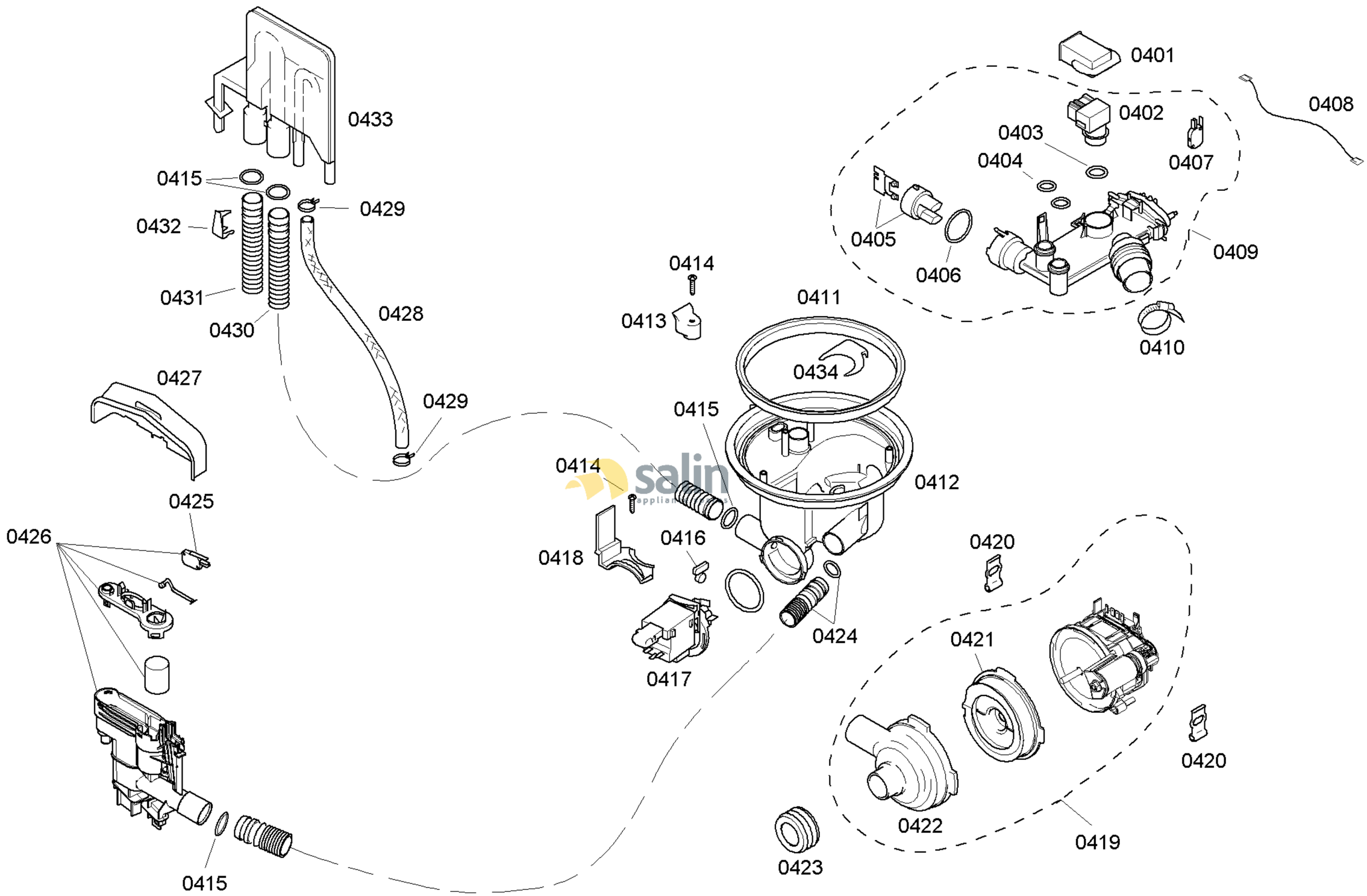


58300000125458 aet 000 a 4/6

FAMILY : SHE46C06UC
MODEL NO: SHE46C06UC/46
Check Position No/Part No or Replacement No

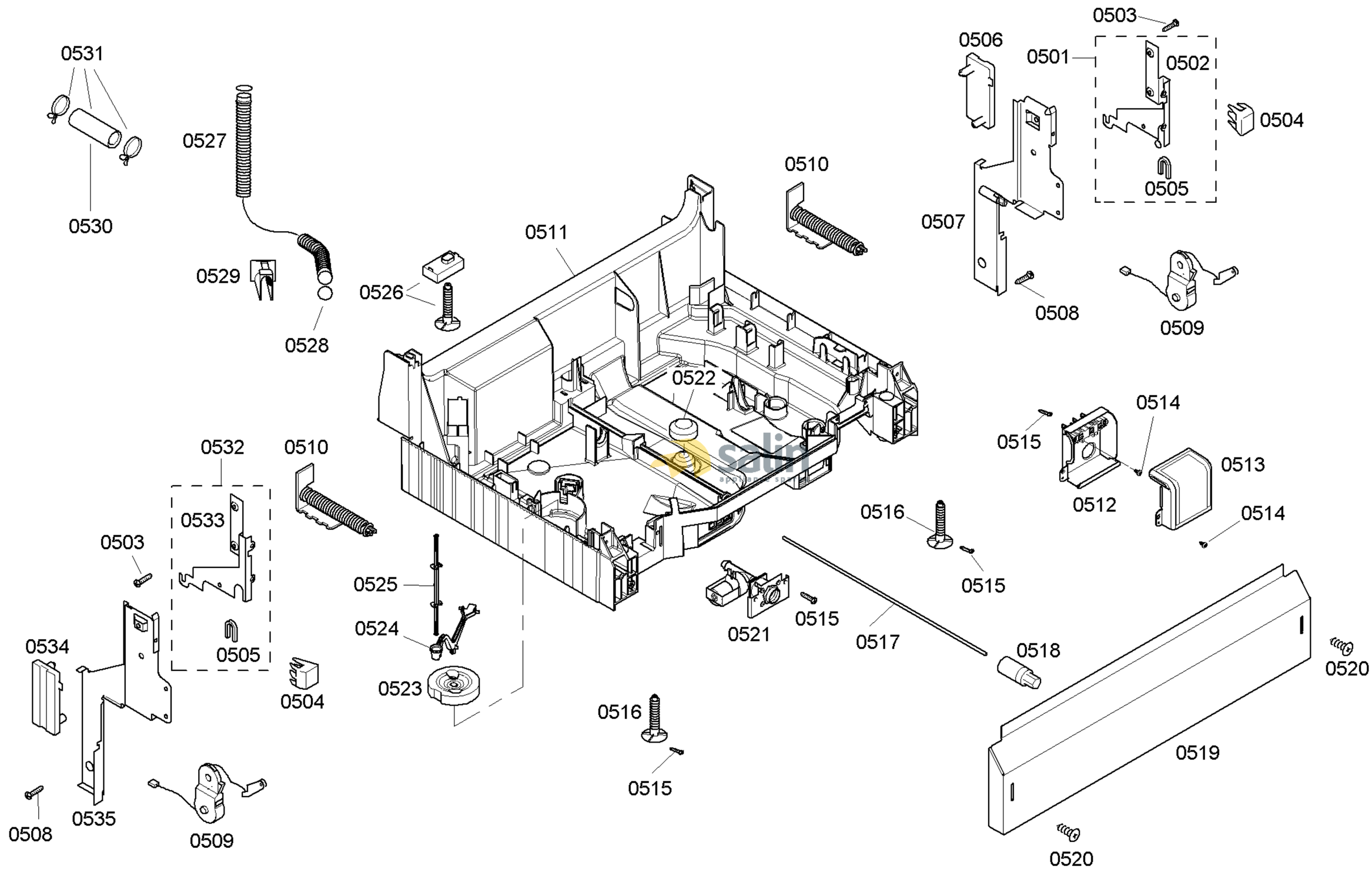


58300000125458 aet 000 a 5/6

FAMILY : SHE46C06UC
MODEL NO: SHE46C06UC/46
Check Position No/Part No or Replacement No

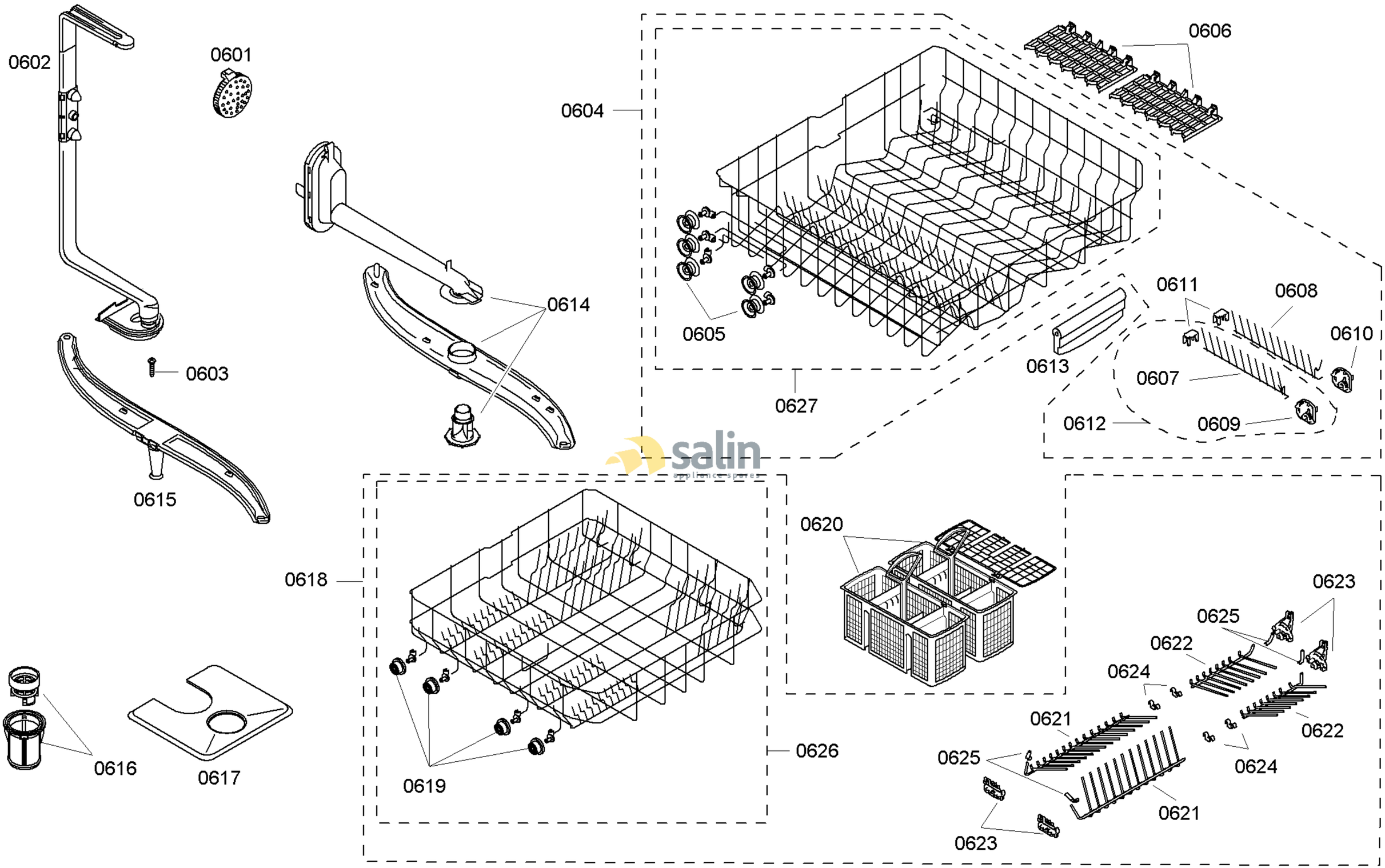


58300000125458 aet 000 a 6/6

FAMILY : SHE46C06UC
MODEL NO: SHE46C06UC/46
Check Position No/Part No or Replacement No