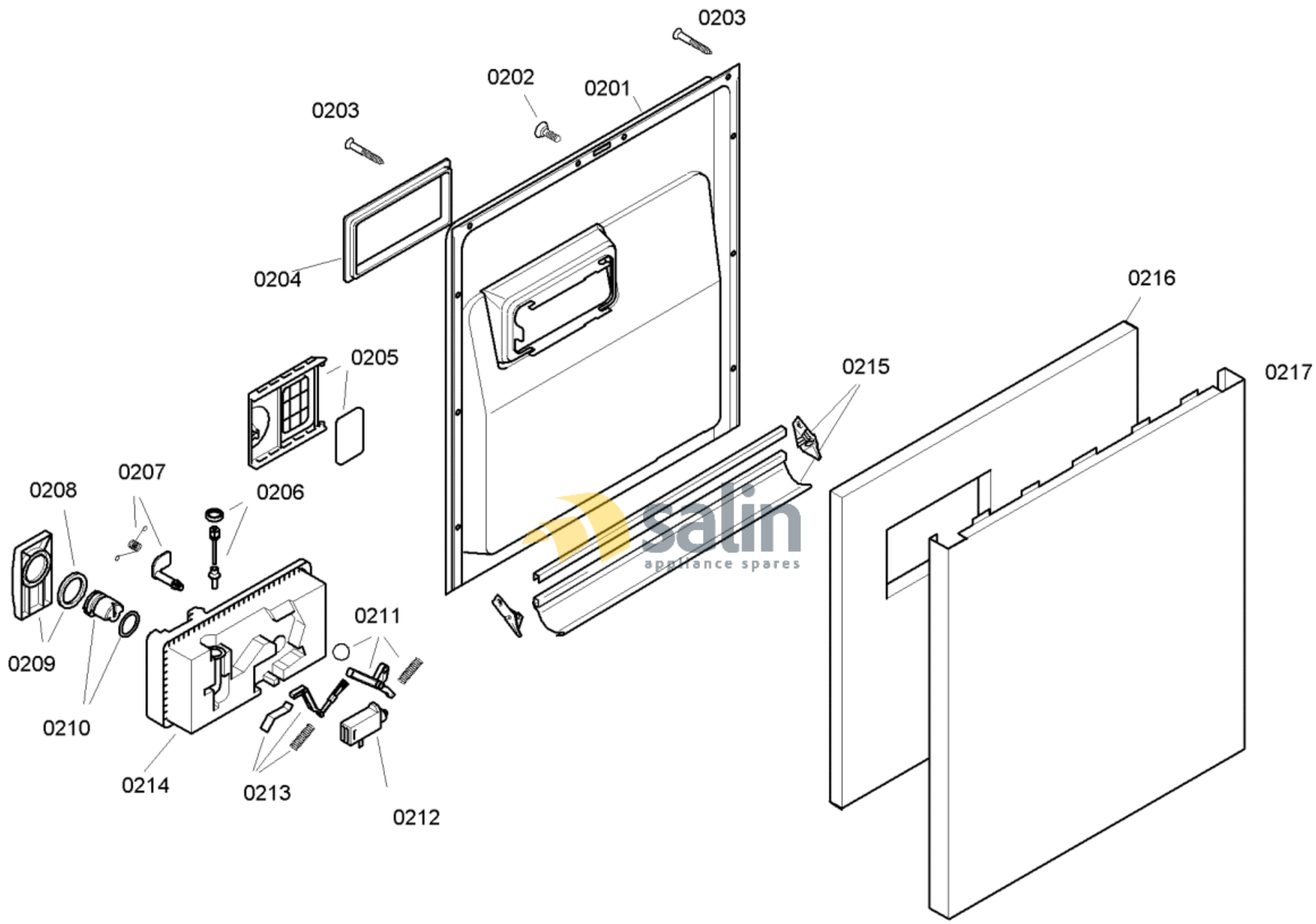

58300000108656 aet 000 b 2/6

FAMILY : SGS45E18II

MODEL NO: SGS45E18II/71

Check Position No/Part No or Replacement No

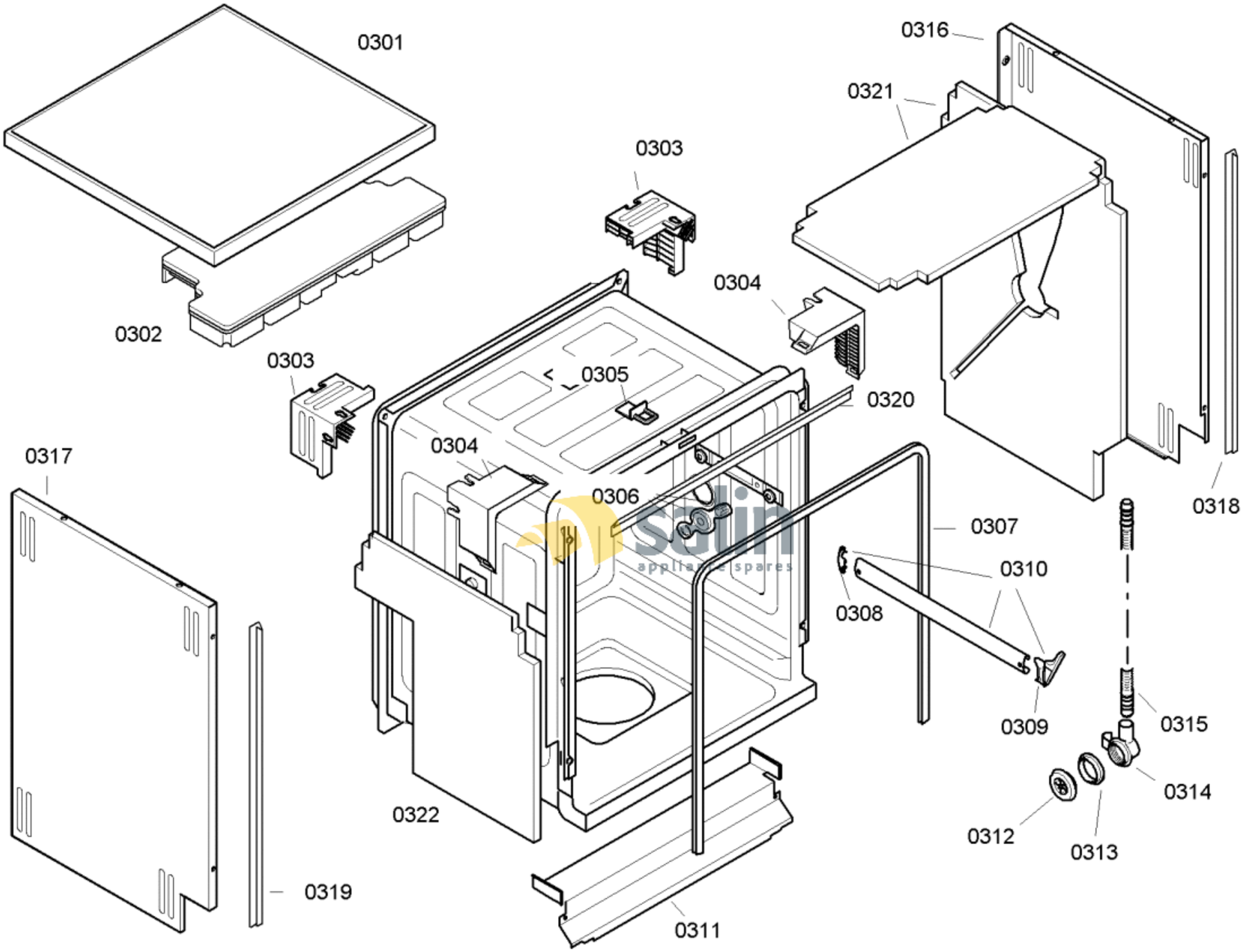

58300000108656 aet 000 b 3/6

FAMILY : SGS45E18II

MODEL NO: SGS45E18II/71

Check Position No/Part No or Replacement No

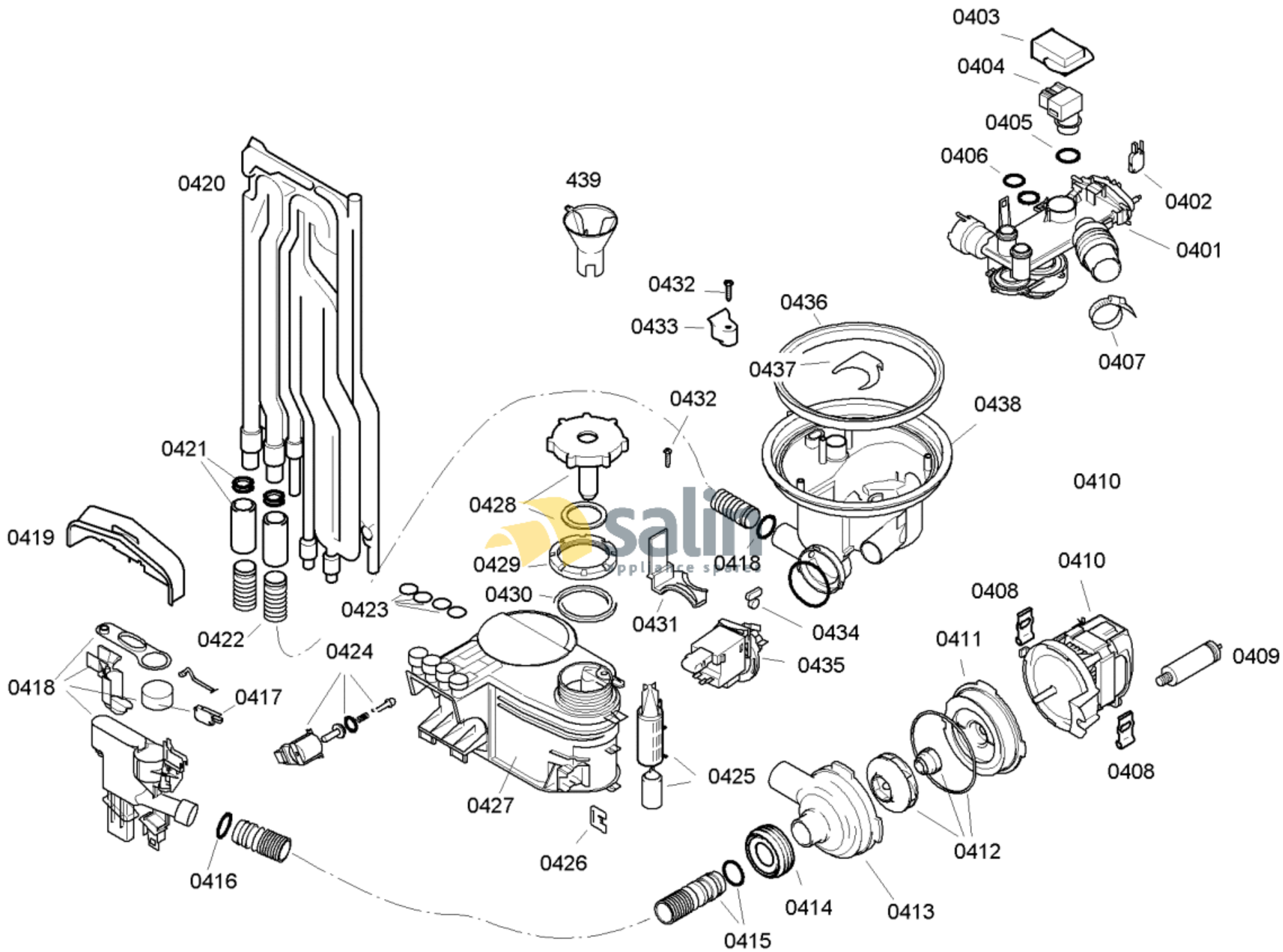

58300000108656 aet 000 b 4/6

FAMILY : SGS45E18II

MODEL NO: SGS45E18II/71

Check Position No/Part No or Replacement No

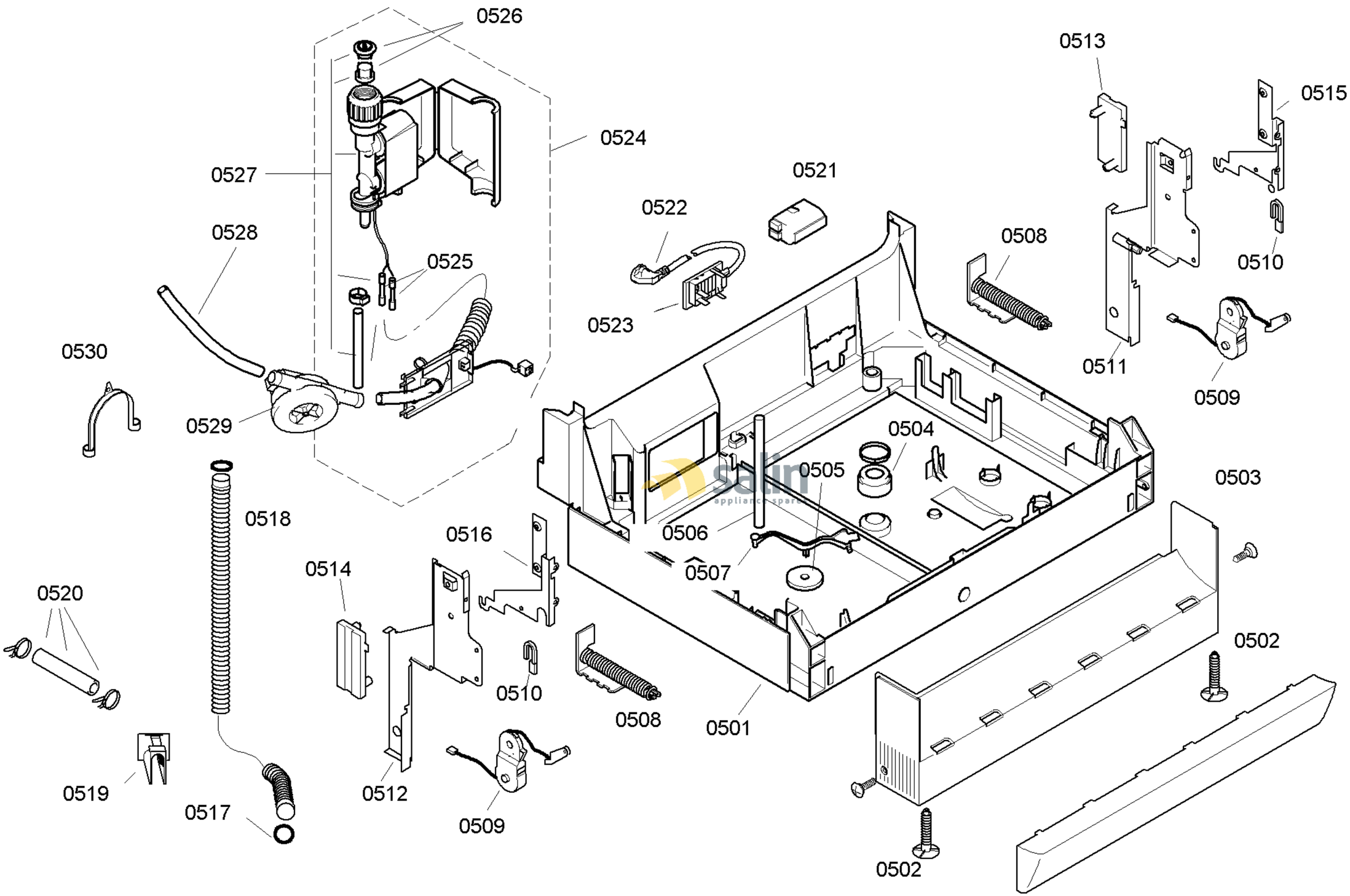

58300000108656 aet 000 b 5/6

FAMILY : SGS45E18II
MODEL NO: SGS45E18II/71
Check Position No/Part No or Replacement No

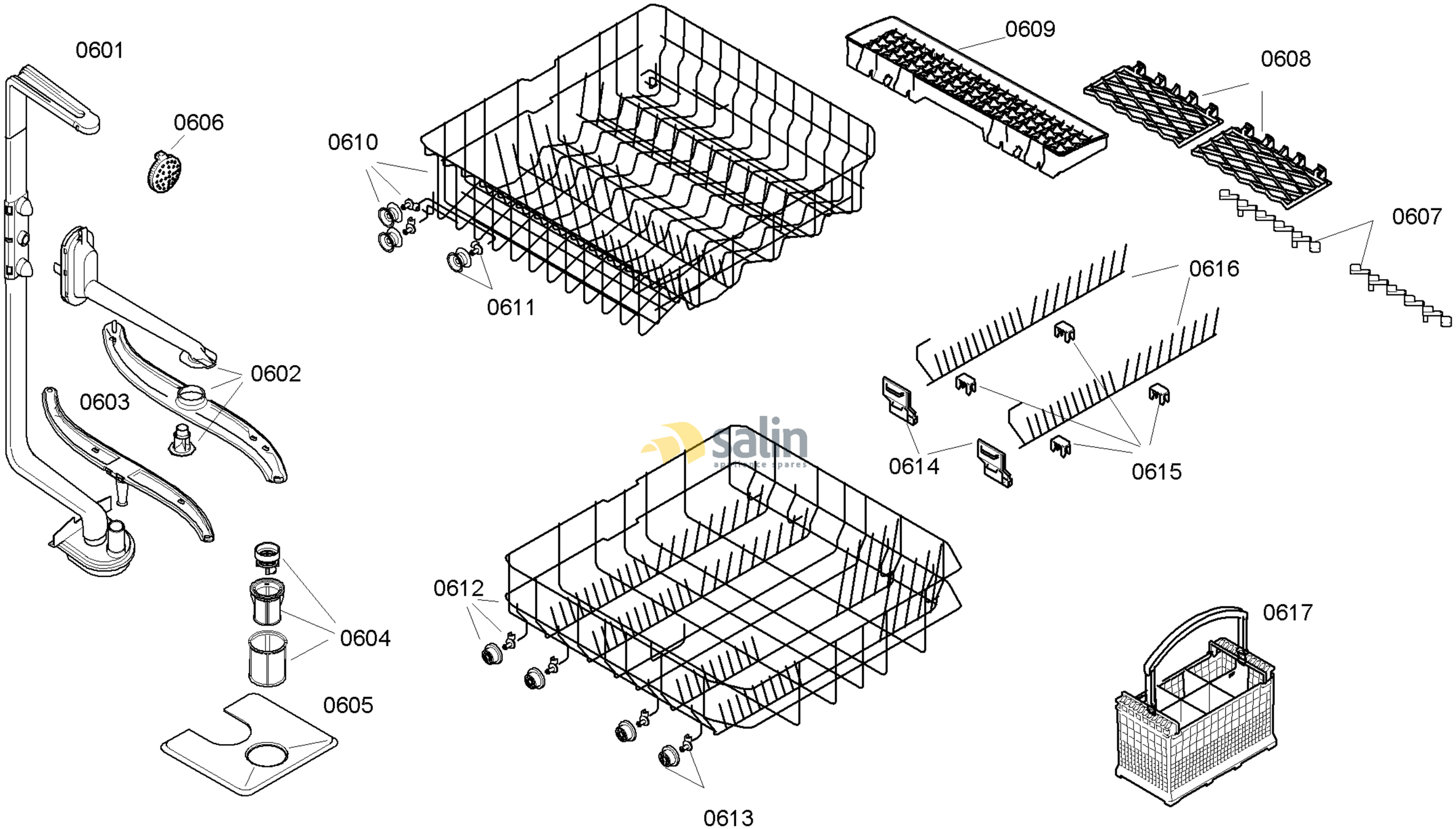

58300000108656 aet 000 b 6/6

FAMILY : SGS45E18II
MODEL NO: SGS45E18II/71
Check Position No/Part No or Replacement No