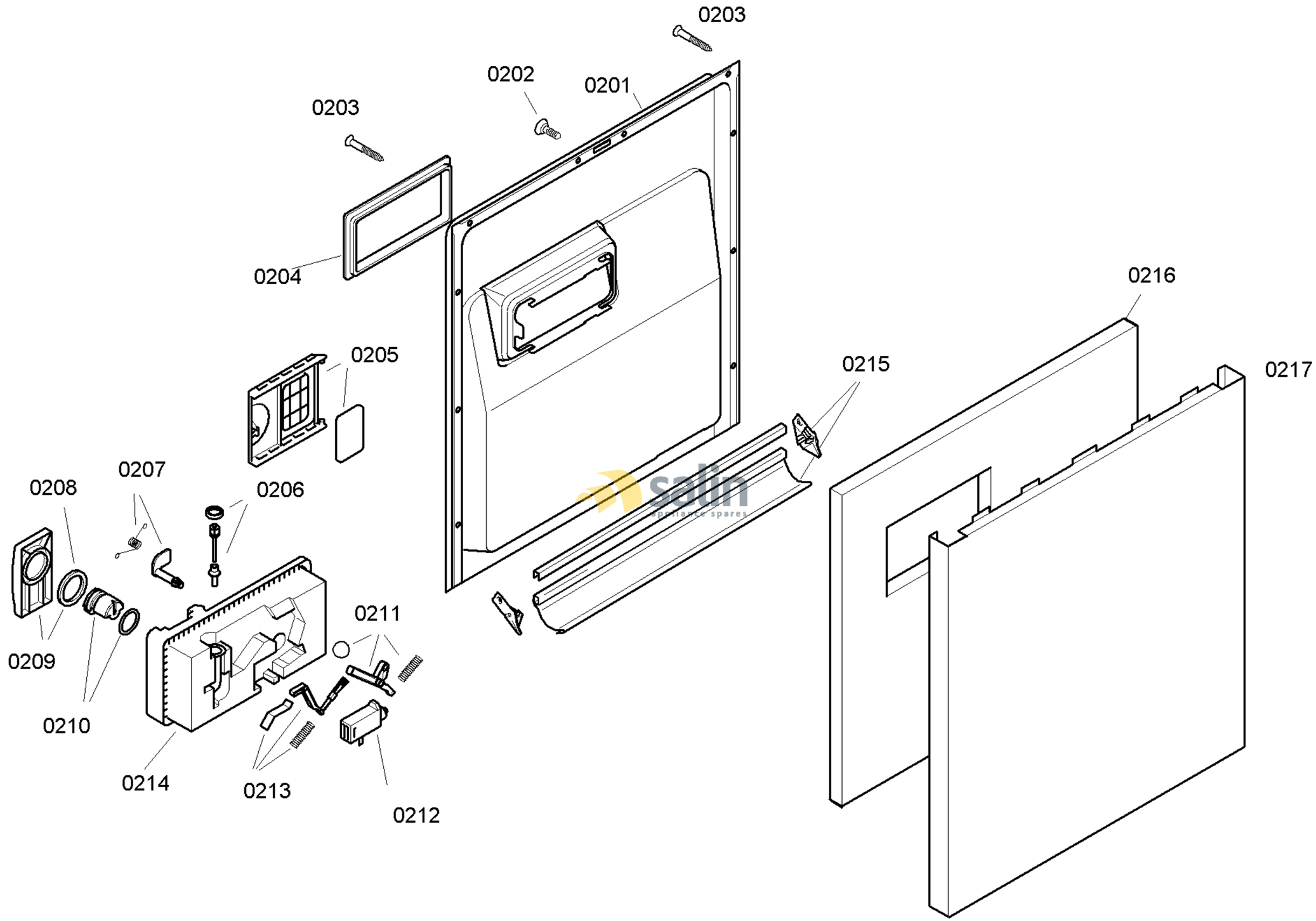

58300000116585 aet 000 c 2/6

FAMILY : SGS55M25EU
MODEL NO: SGS55M25EU/01
Check Position No/Part No or Replacement No

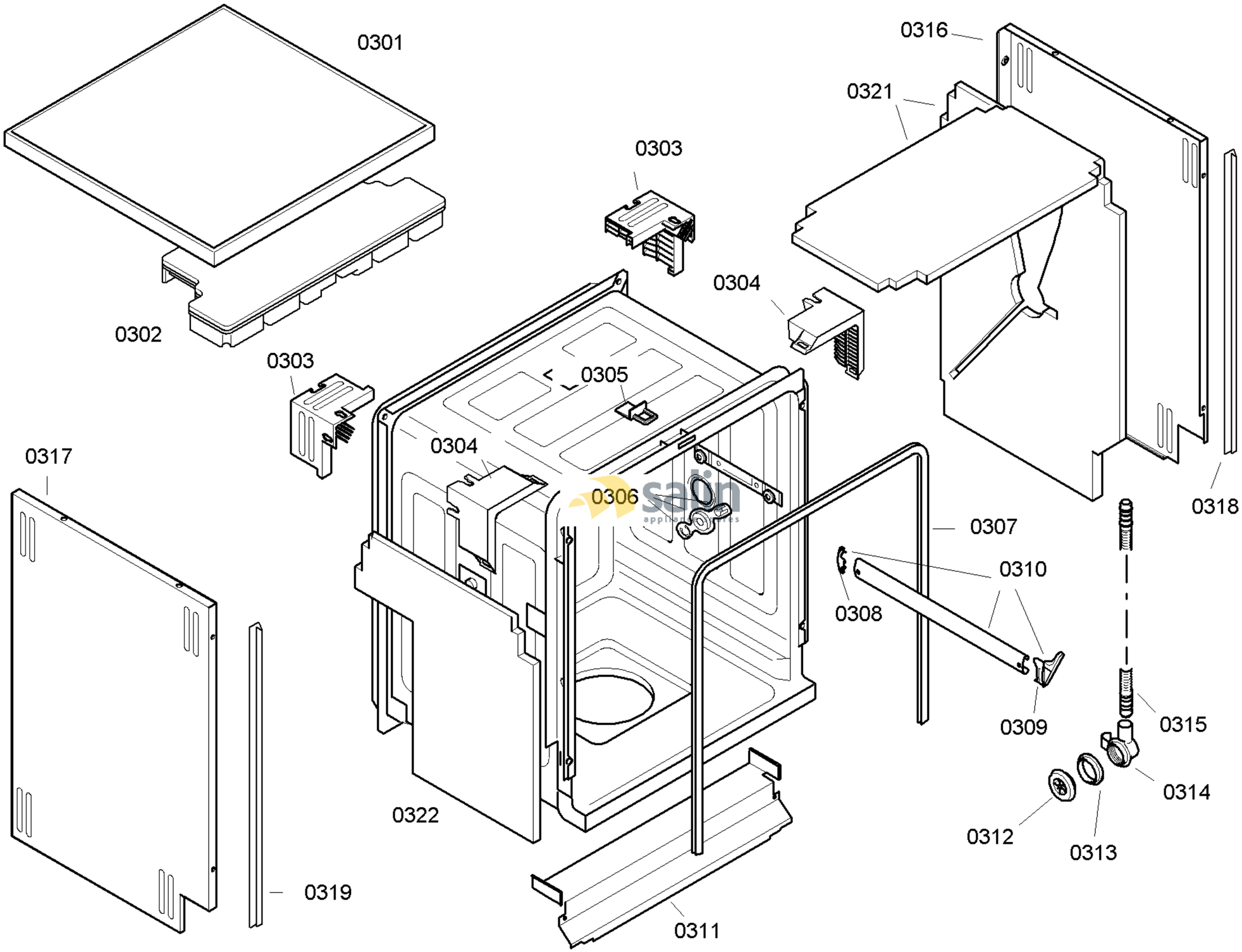

58300000116585 aet 000 c 3/6

FAMILY : SGS55M25EU
MODEL NO: SGS55M25EU/01
Check Position No/Part No or Replacement No

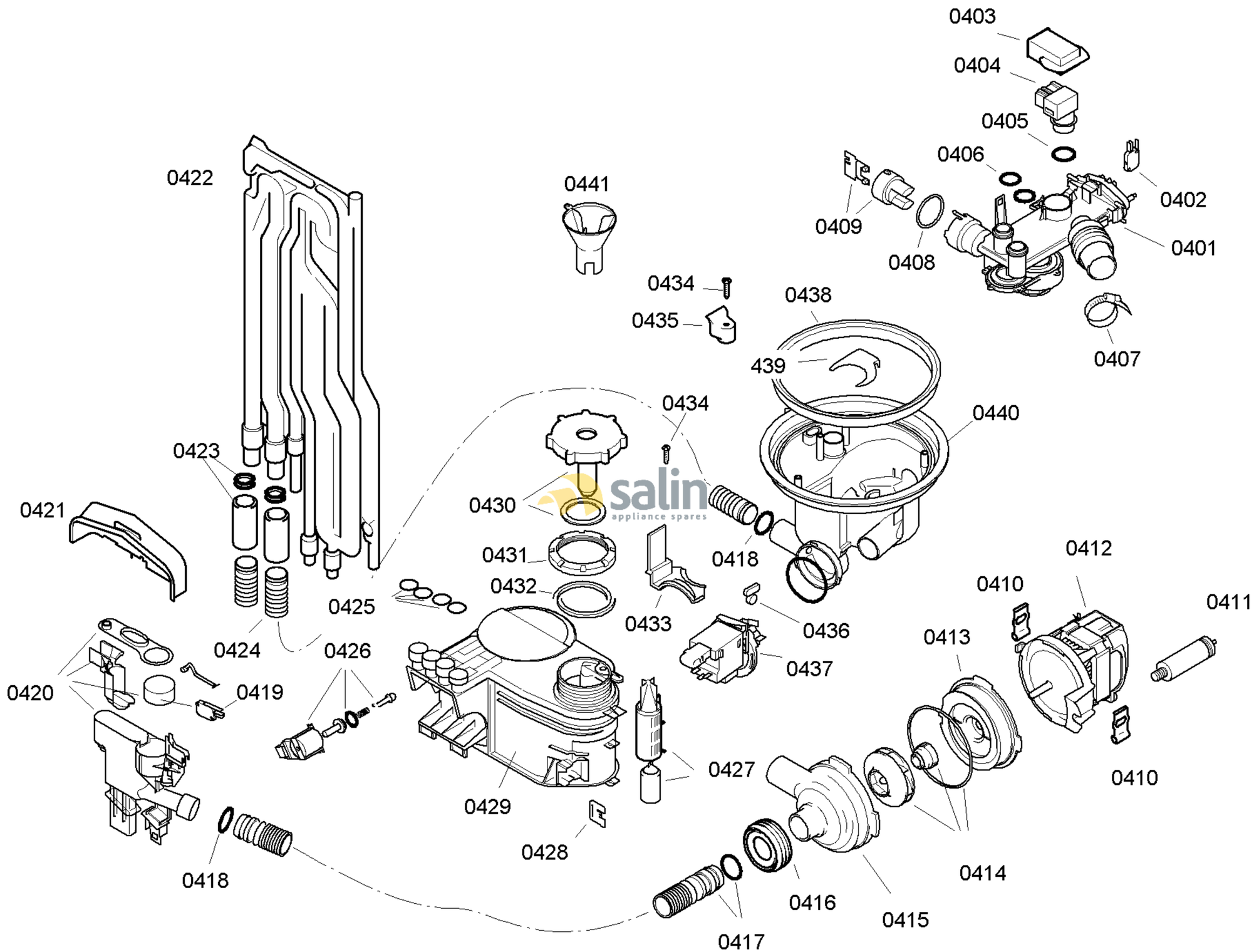

58300000116585 aet 000 c 4/6

FAMILY : SGS55M25EU
MODEL NO: SGS55M25EU/01
Check Position No/Part No or Replacement No

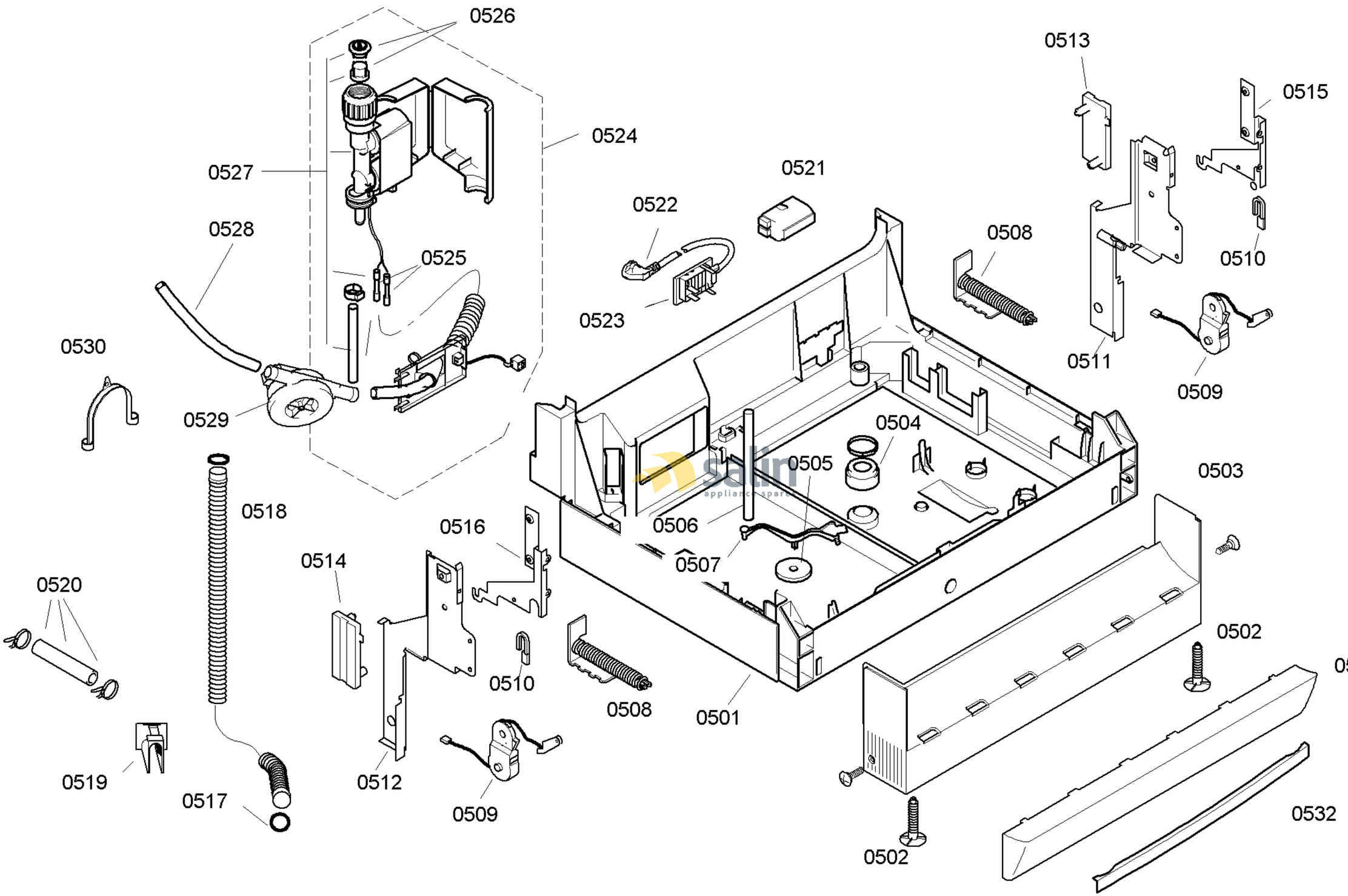

58300000116585 aet 000 c 5/6

FAMILY : SGS55M25EU
MODEL NO: SGS55M25EU/01
Check Position No/Part No or Replacement No

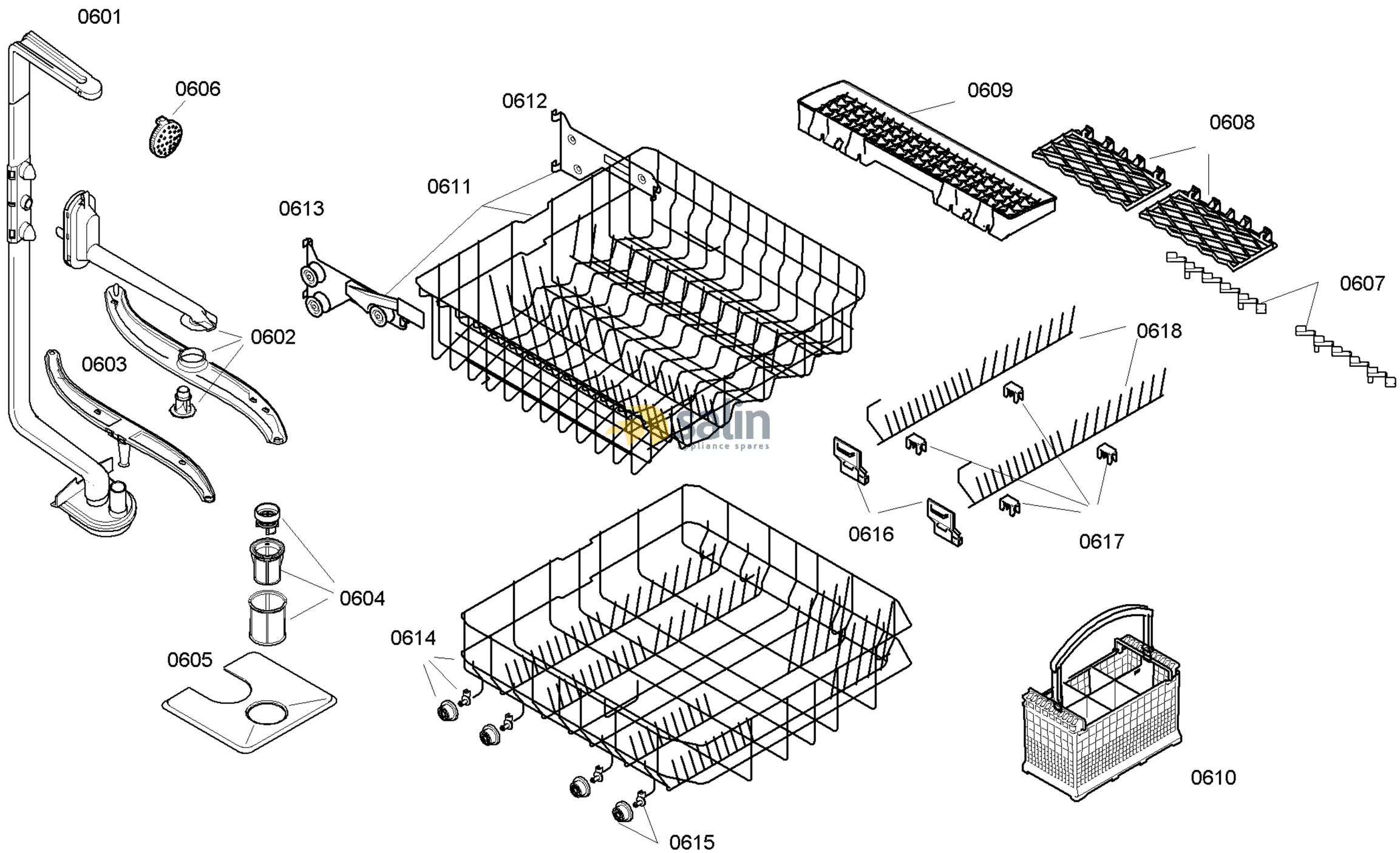

58300000116585 aet 000 c 6/6

FAMILY : SGS55M25EU
MODEL NO: SGS55M25EU/01
Check Position No/Part No or Replacement No