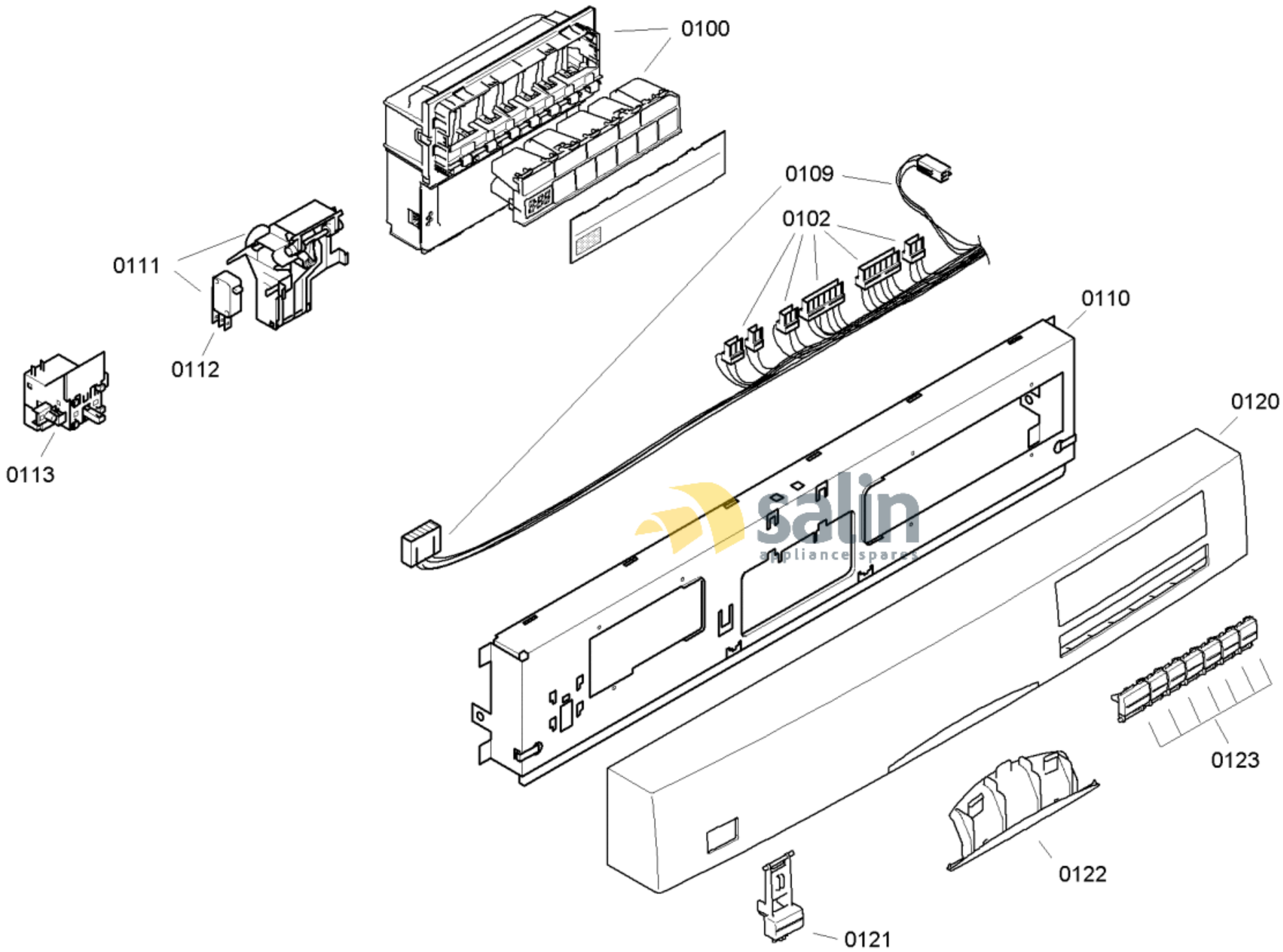

58300000125441 aet 000 a 1/6

FAMILY : SGS85M32

MODEL NO: SGS85M32/47

Check Position No/Part No or Replacement No

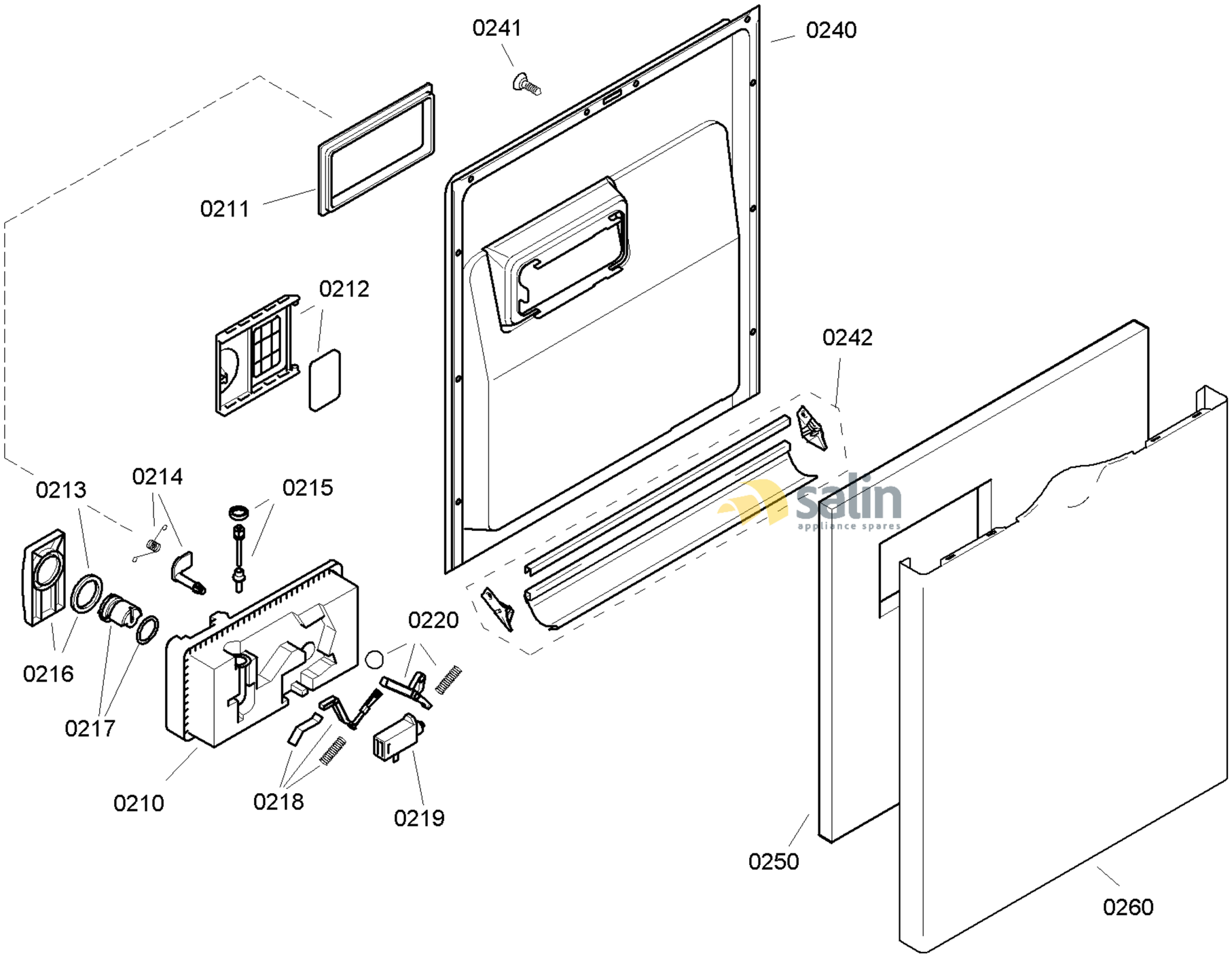

58300000125441 aet 000 a 2/6

FAMILY : SGS85M32
MODEL NO: SGS85M32/47
Check Position No/Part No or Replacement No

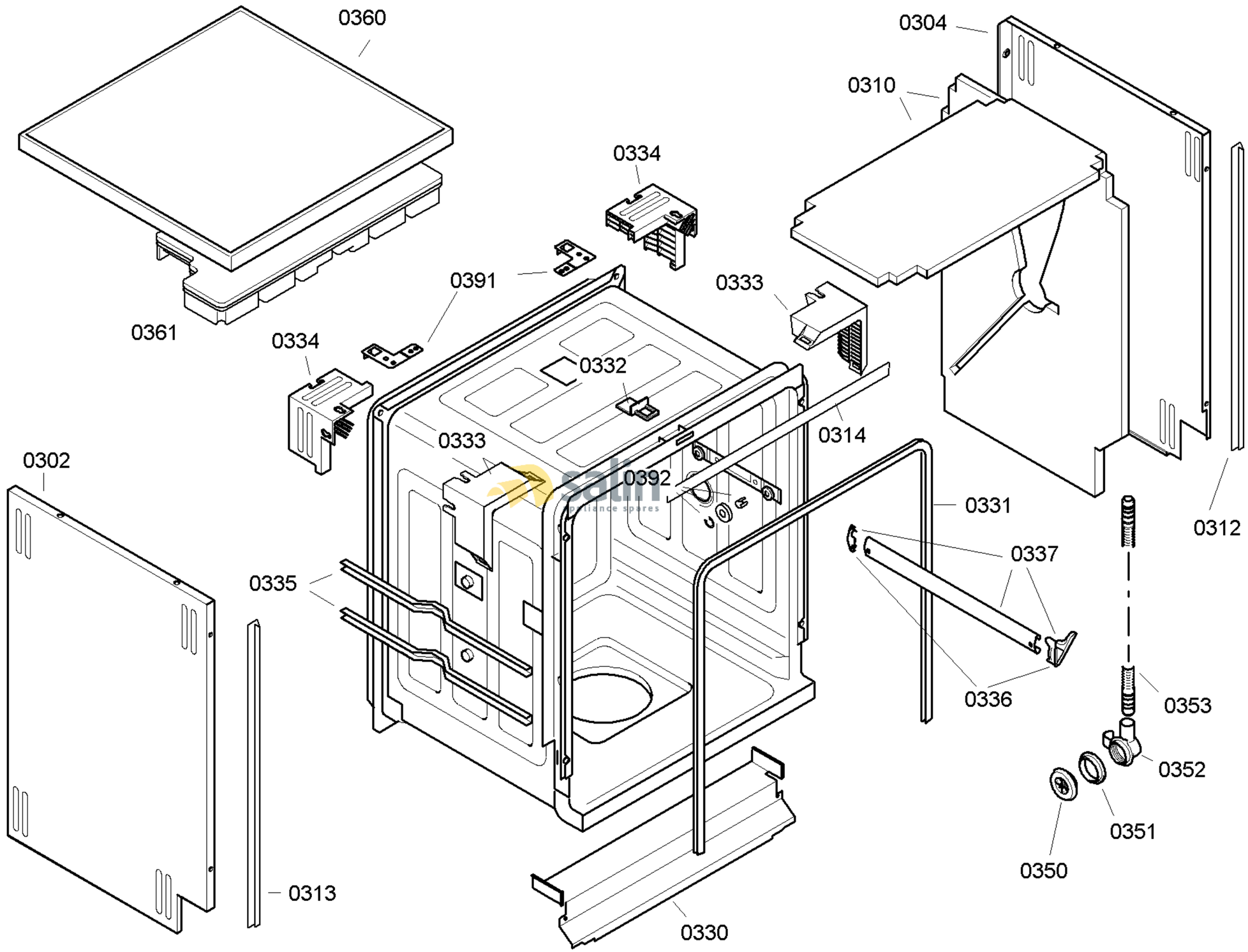

58300000125441 aet 000 a 3/6

FAMILY : SGS85M32
MODEL NO: SGS85M32/47
Check Position No/Part No or Replacement No

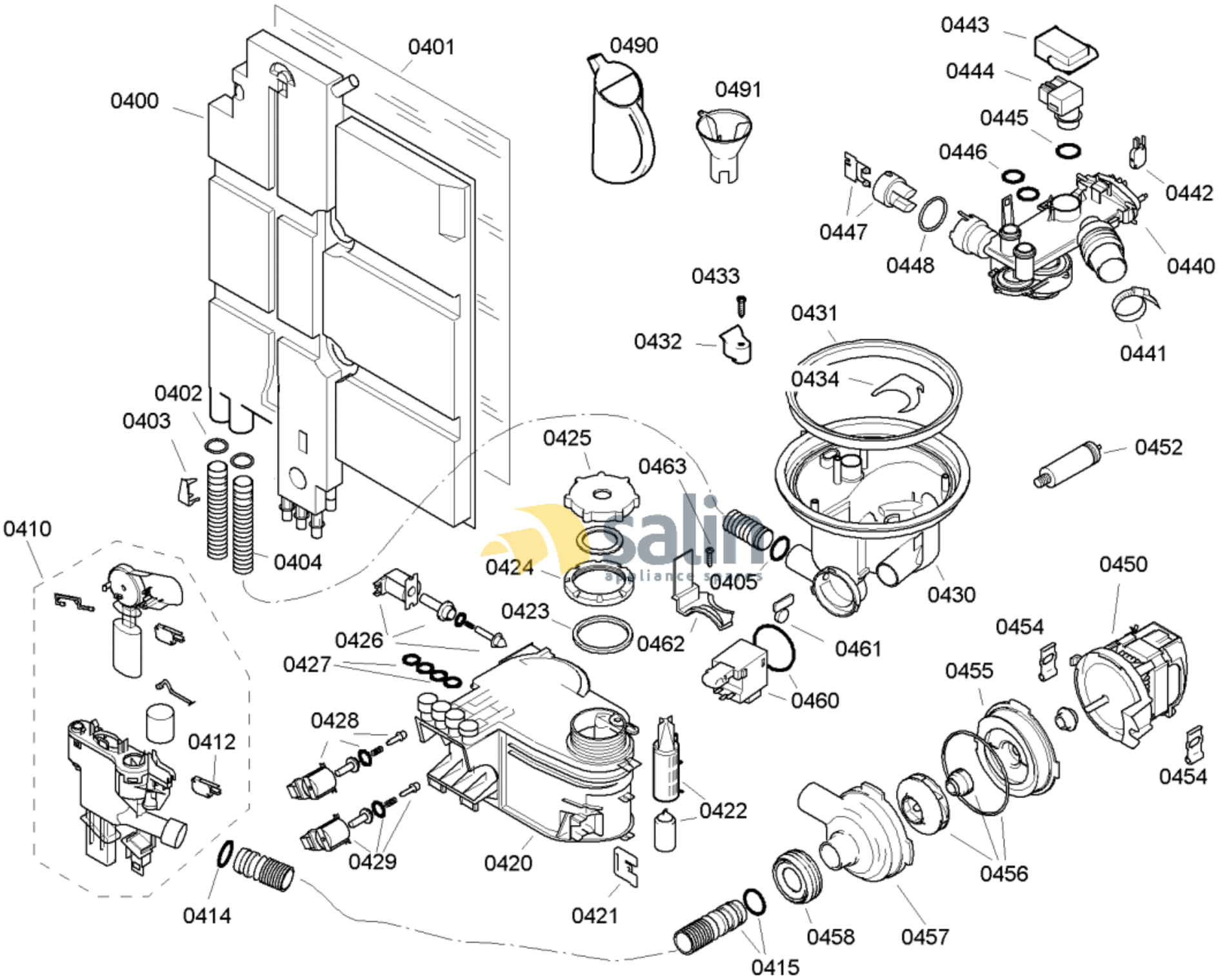

58300000125441 aet 000 a 4/6

FAMILY : SGS85M32

MODEL NO: SGS85M32/47

Check Position No/Part No or Replacement No

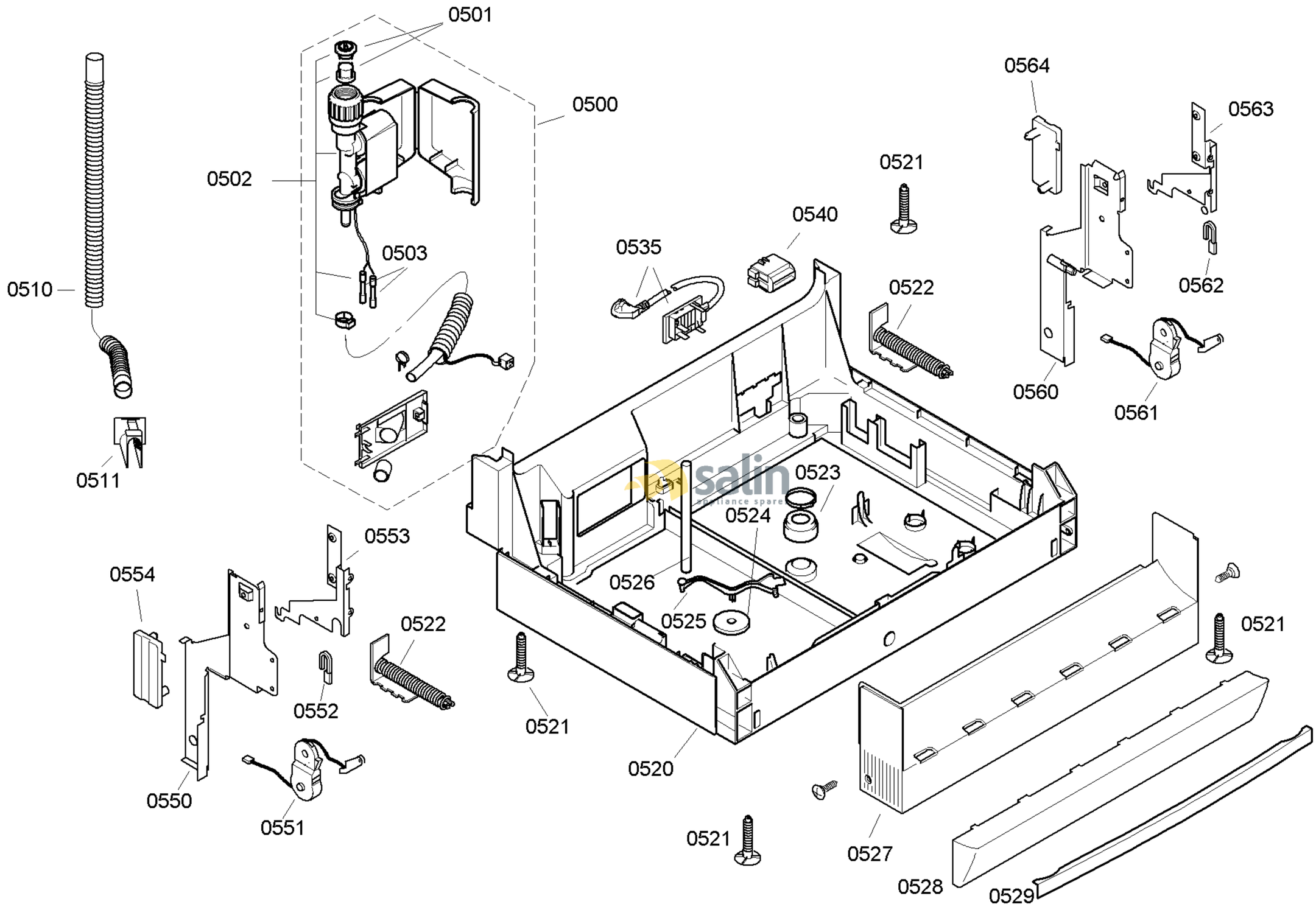

58300000125441 aet 000 a 5/6

FAMILY : SGS85M32
MODEL NO: SGS85M32/47
Check Position No/Part No or Replacement No

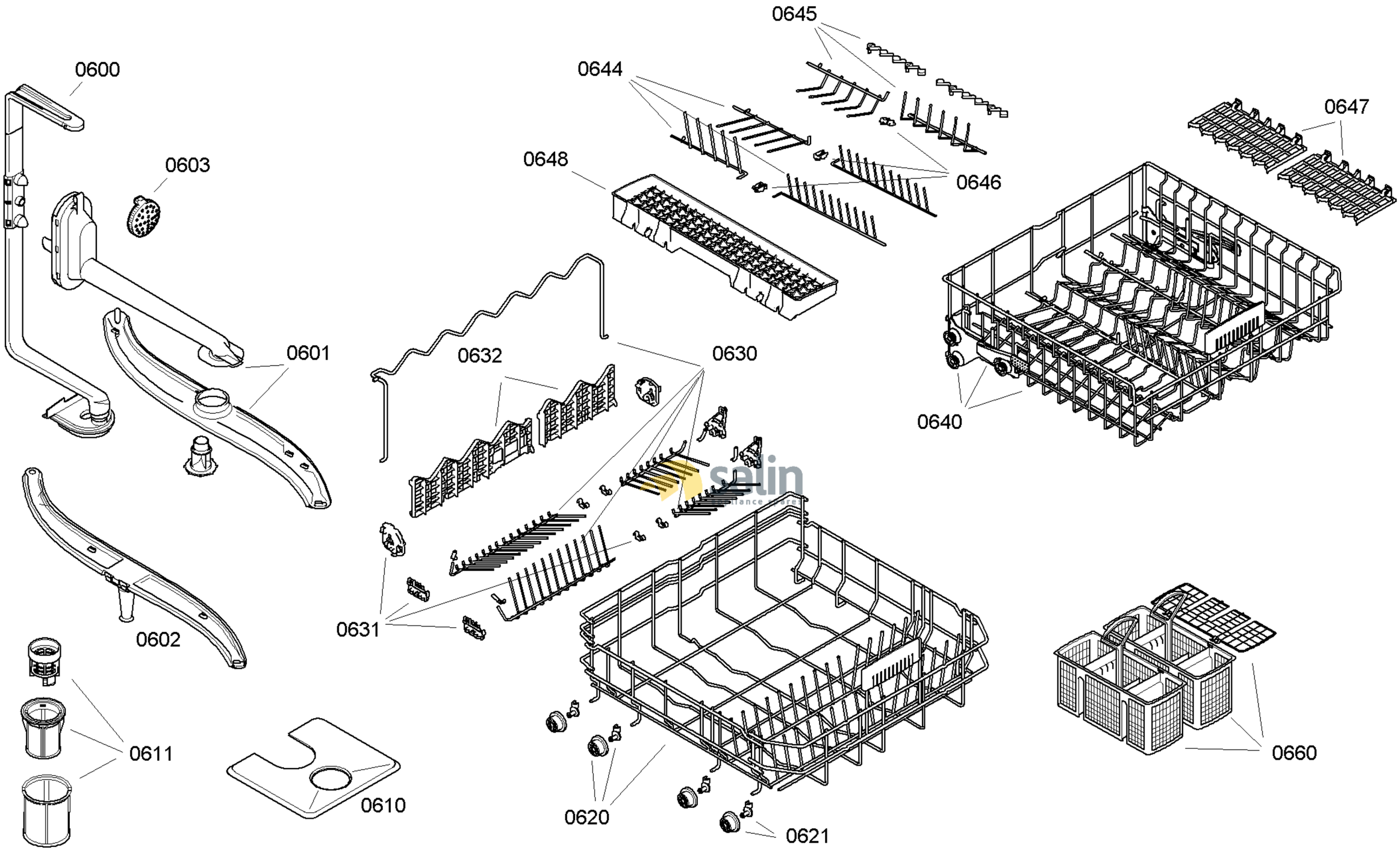

58300000125441 aet 000 a 6/6

FAMILY : SGS85M32
MODEL NO: SGS85M32/47
Check Position No/Part No or Replacement No