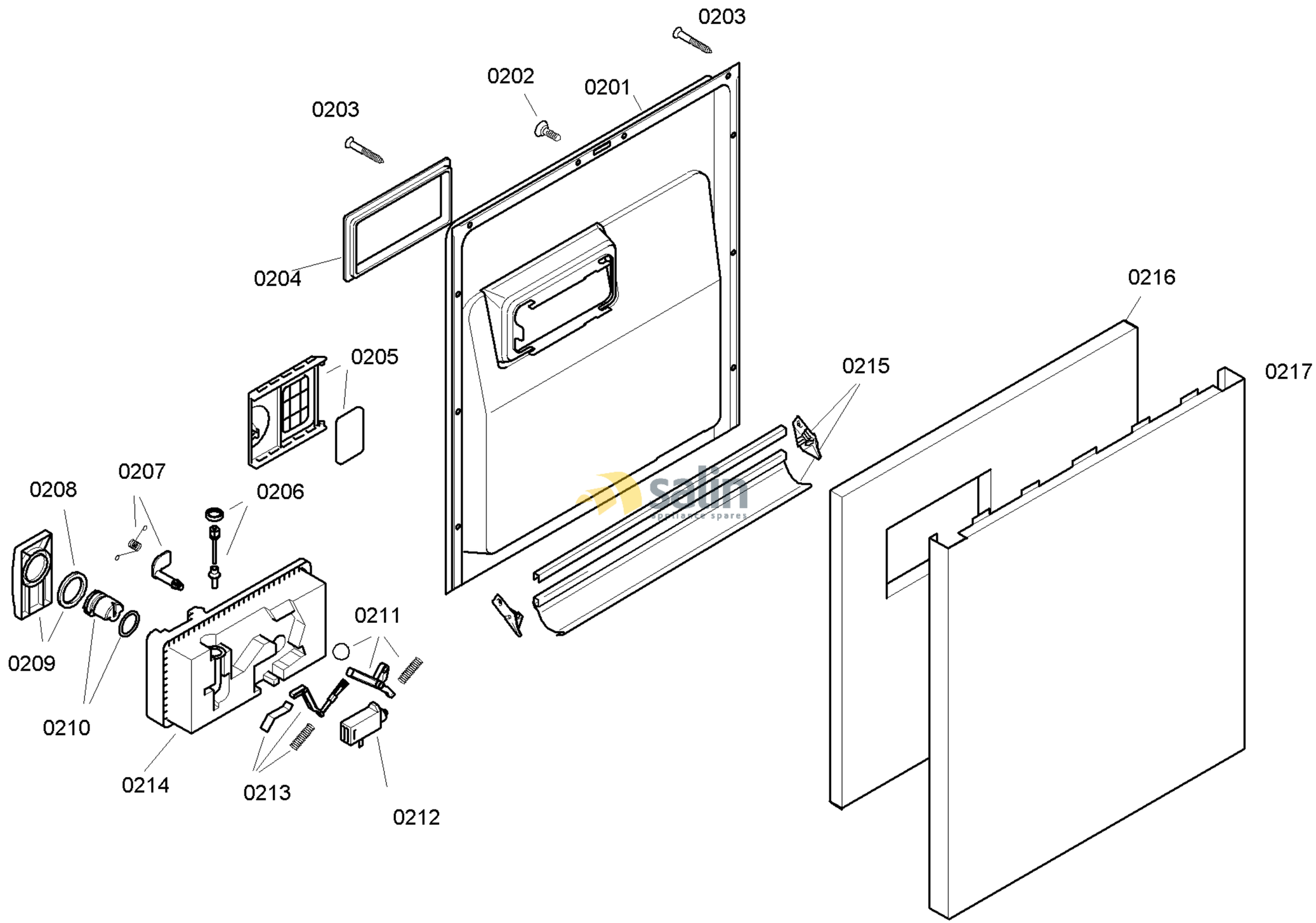

58300000130633 aet 000 a 2/6

FAMILY : SGS55M25BR
MODEL NO: SGS55M25BR/82
Check Position No/Part No or Replacement No

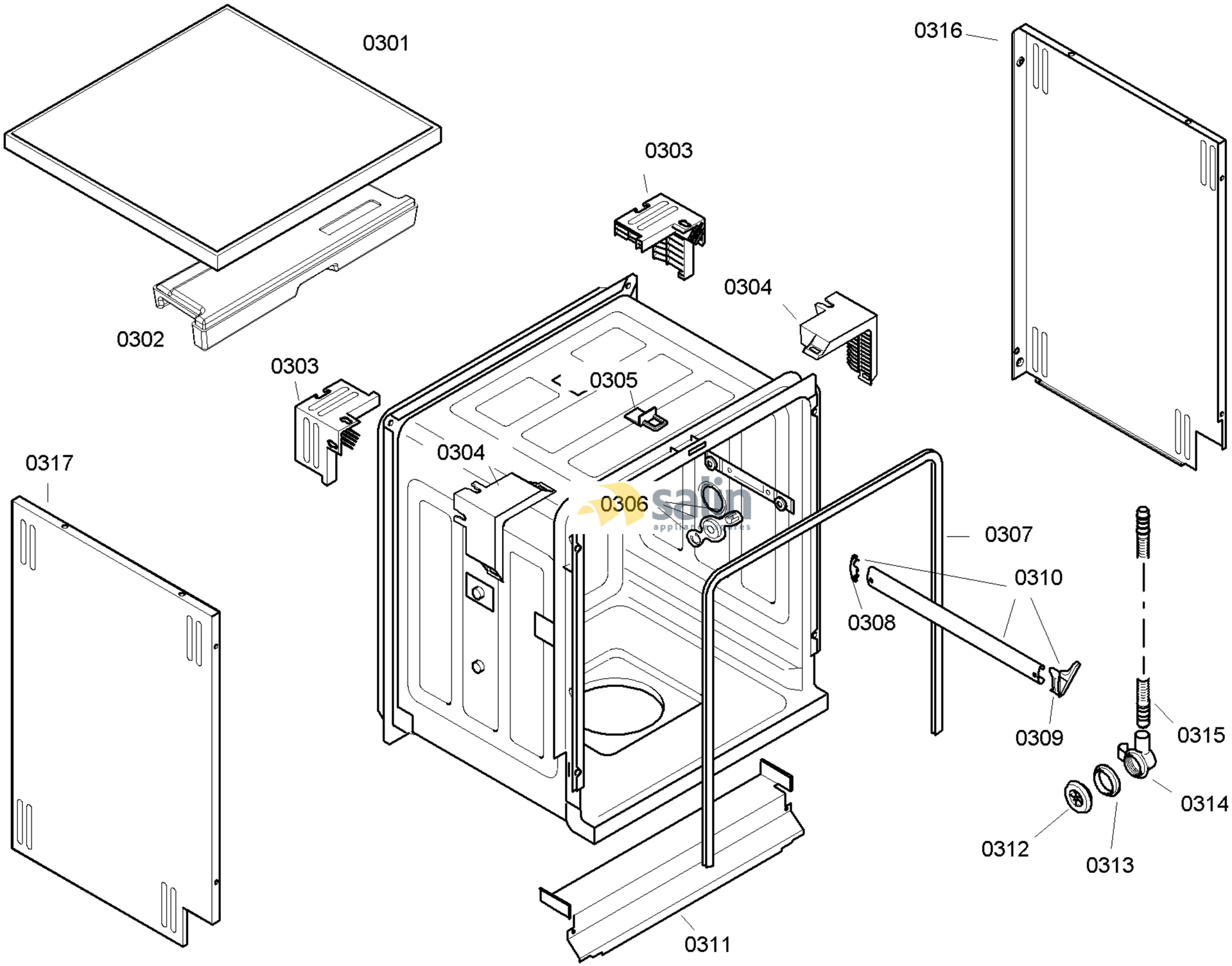

58300000130633 aet 000 a 3/6

FAMILY : SGS55M25BR
MODEL NO: SGS55M25BR/82
Check Position No/Part No or Replacement No

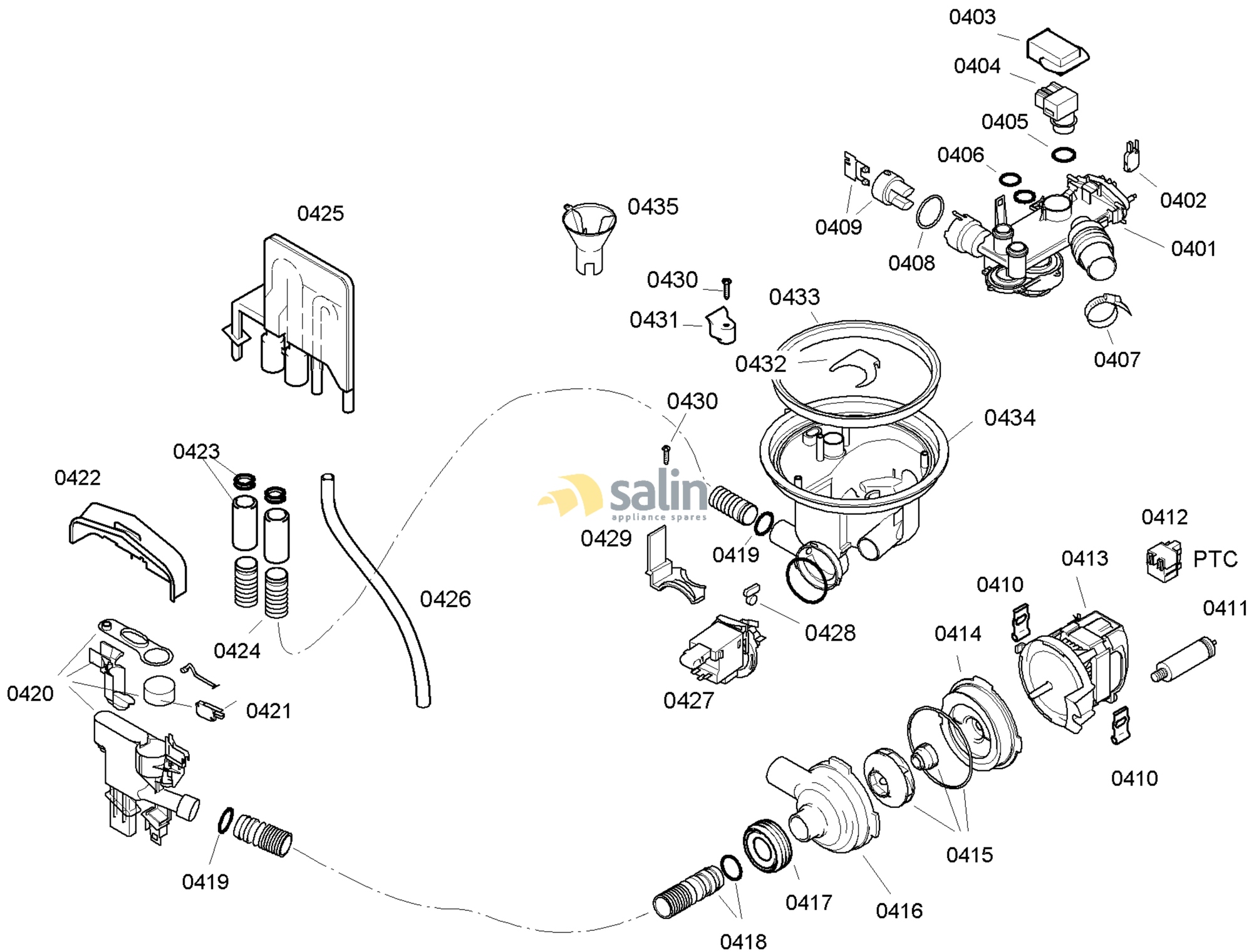

58300000130633 aet 000 a 4/6

FAMILY : SGS55M25BR
MODEL NO: SGS55M25BR/82
Check Position No/Part No or Replacement No

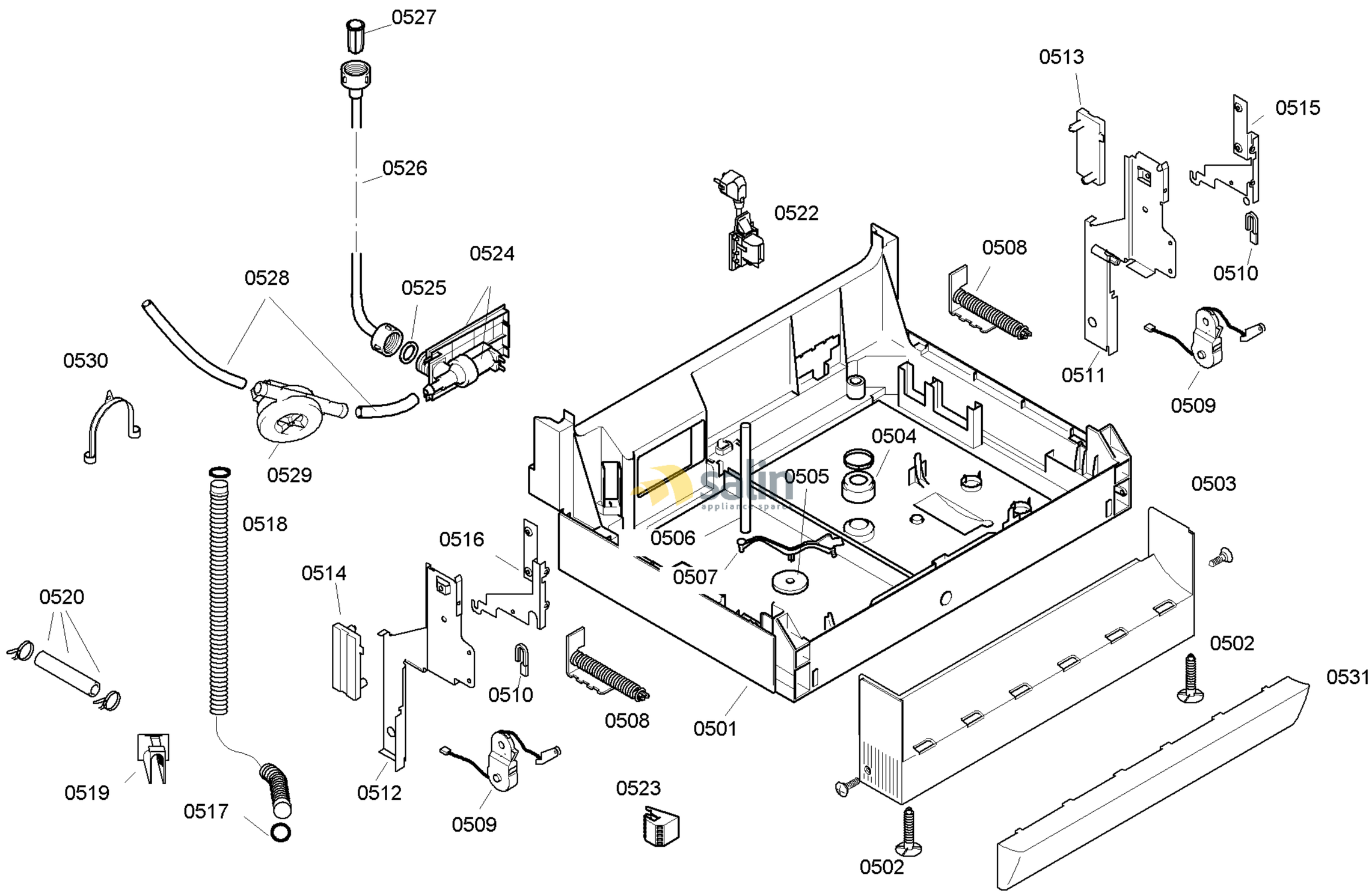

58300000130633 aet 000 a 5/6

FAMILY : SGS55M25BR
MODEL NO: SGS55M25BR/82
Check Position No/Part No or Replacement No

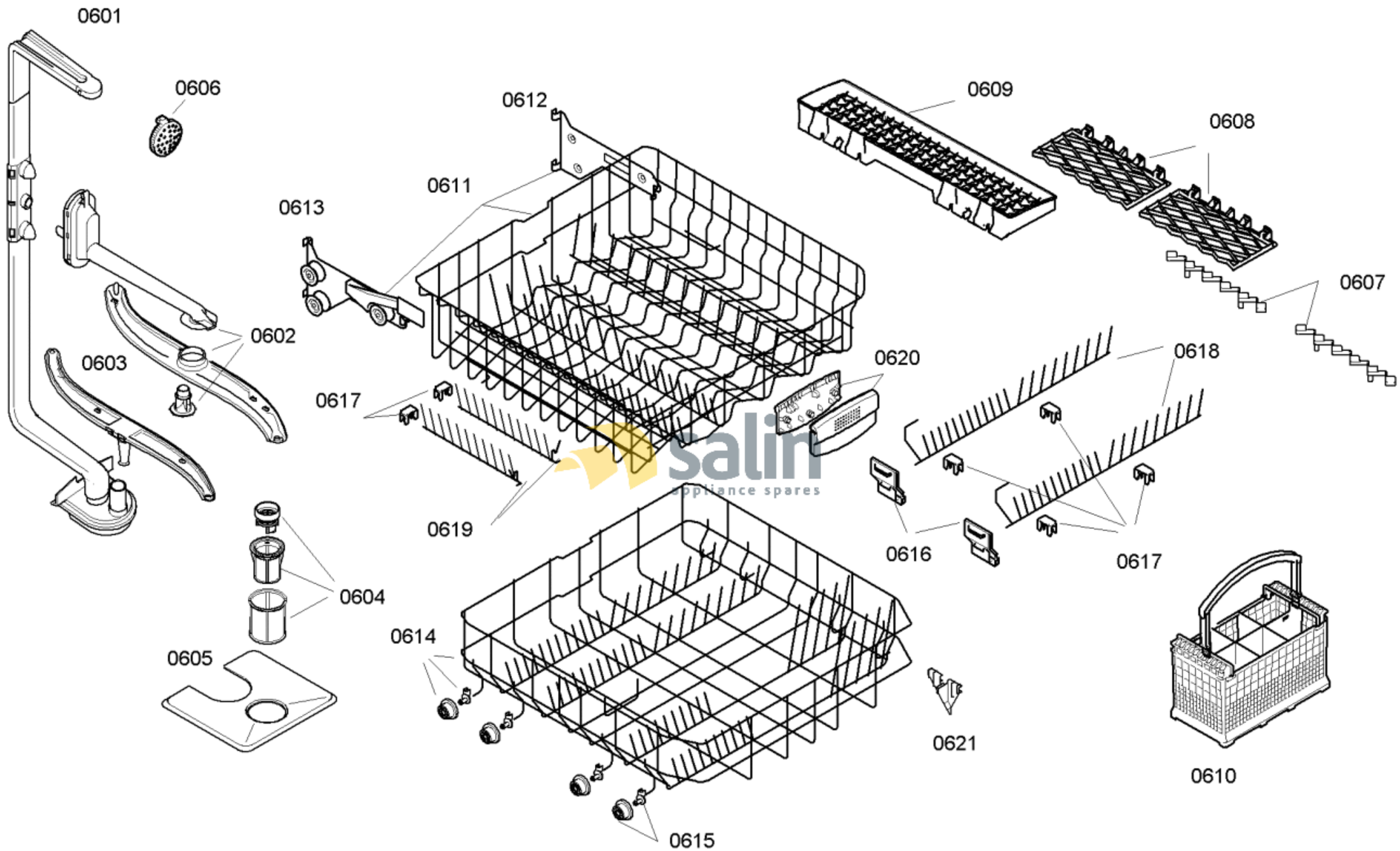

58300000130633 aet 000 a 6/6

FAMILY : SGS55M25BR

MODEL NO: SGS55M25BR/82

Check Position No/Part No or Replacement No