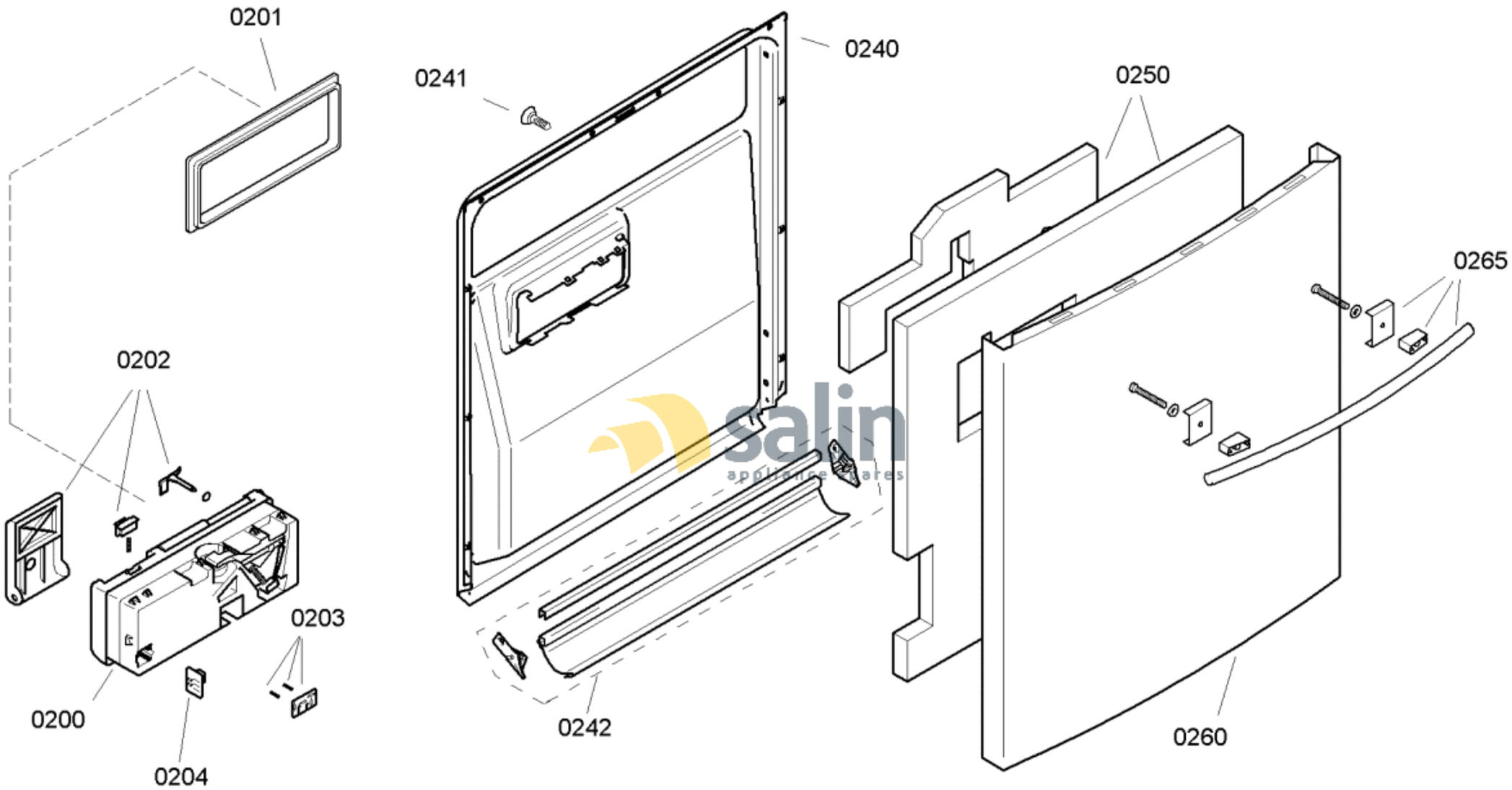

58300000124935 aet 000 b 2/6

FAMILY : SGS09T03EU

MODEL NO: SGS09T03EU/01

Check Position No/Part No or Replacement No

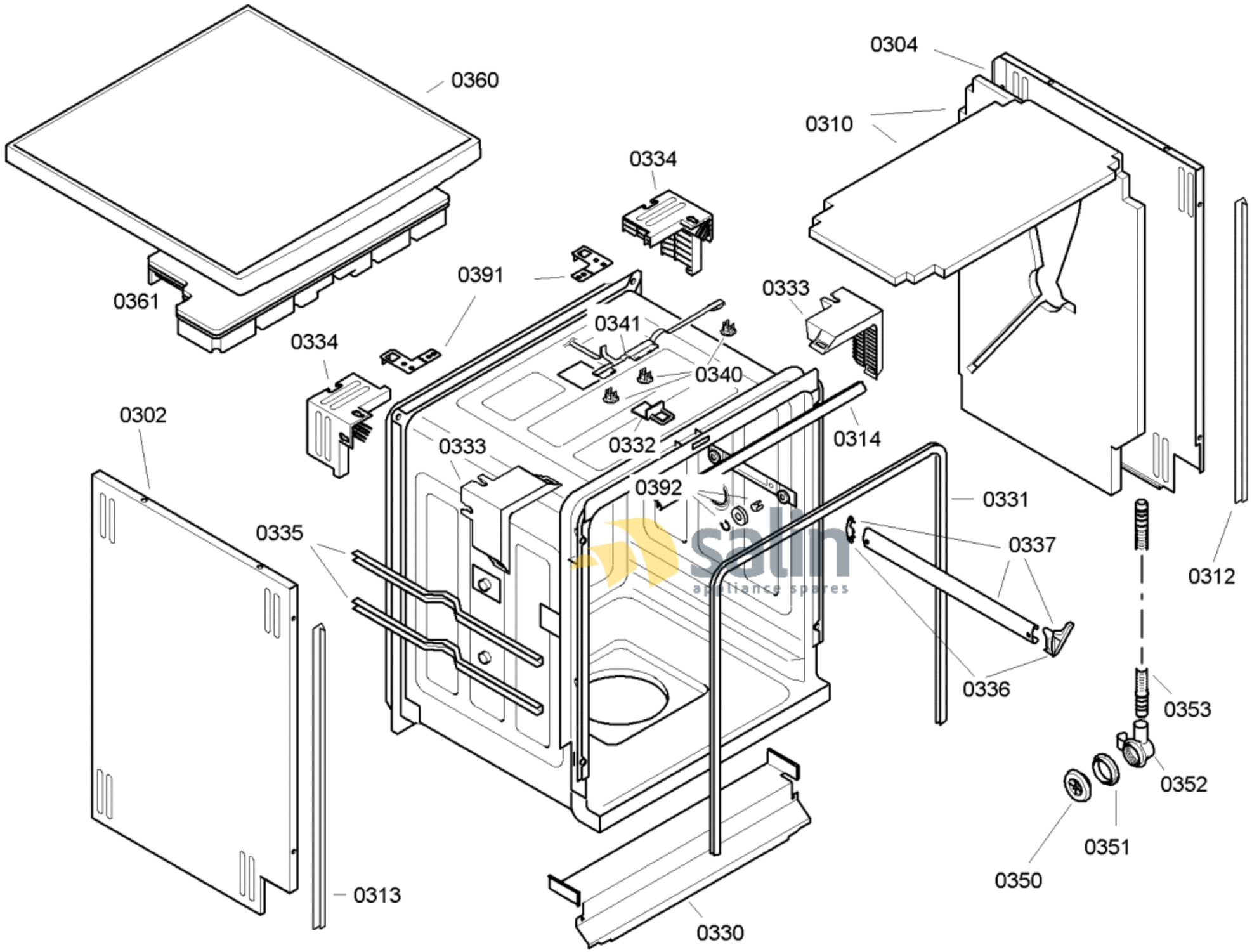

58300000124935 aet 000 b 3/6

FAMILY : SGS09T03EU

MODEL NO: SGS09T03EU/01

Check Position No/Part No or Replacement No

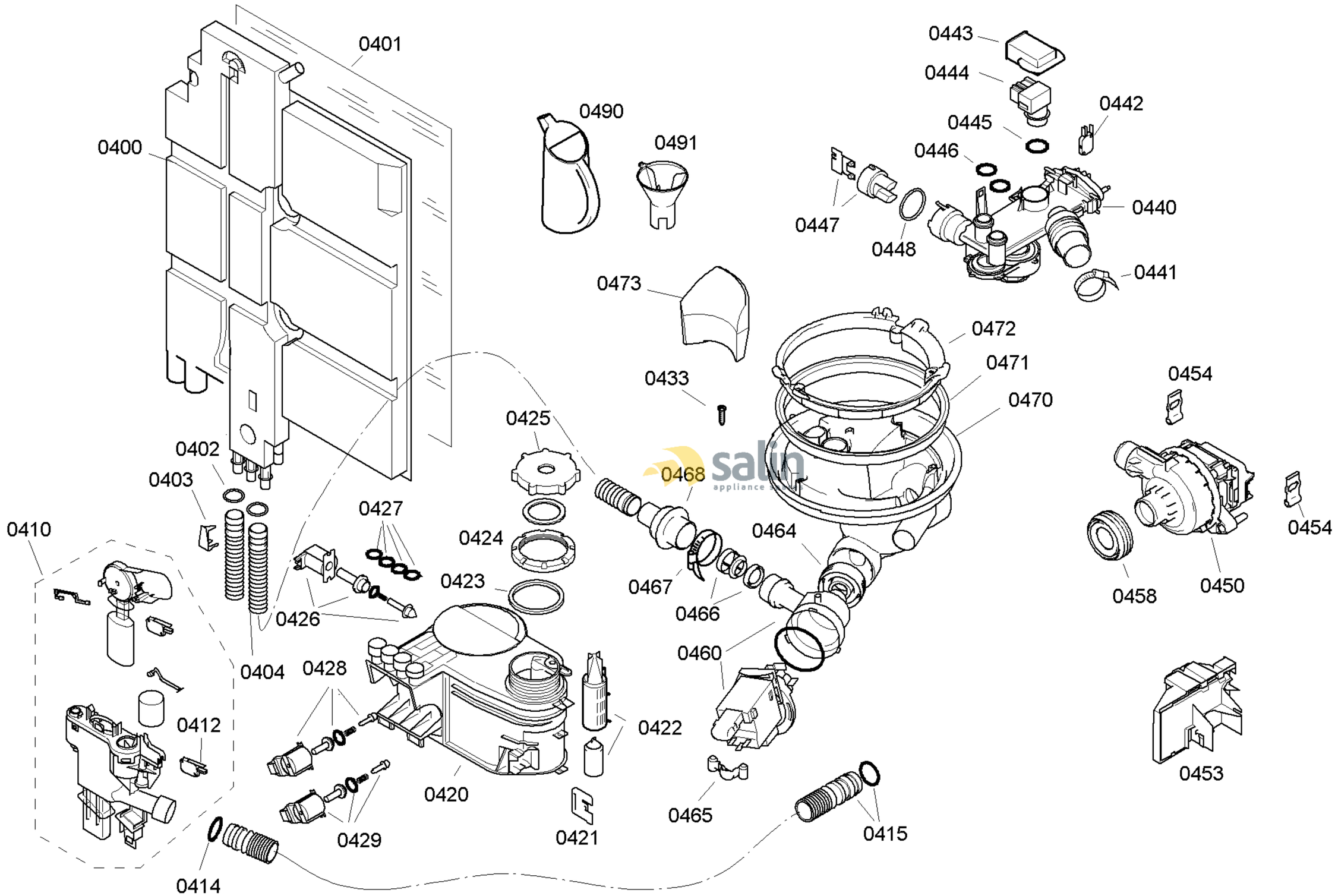

58300000124935 aet 000 b 4/6

FAMILY : SGS09T03EU
MODEL NO: SGS09T03EU/01
Check Position No/Part No or Replacement No

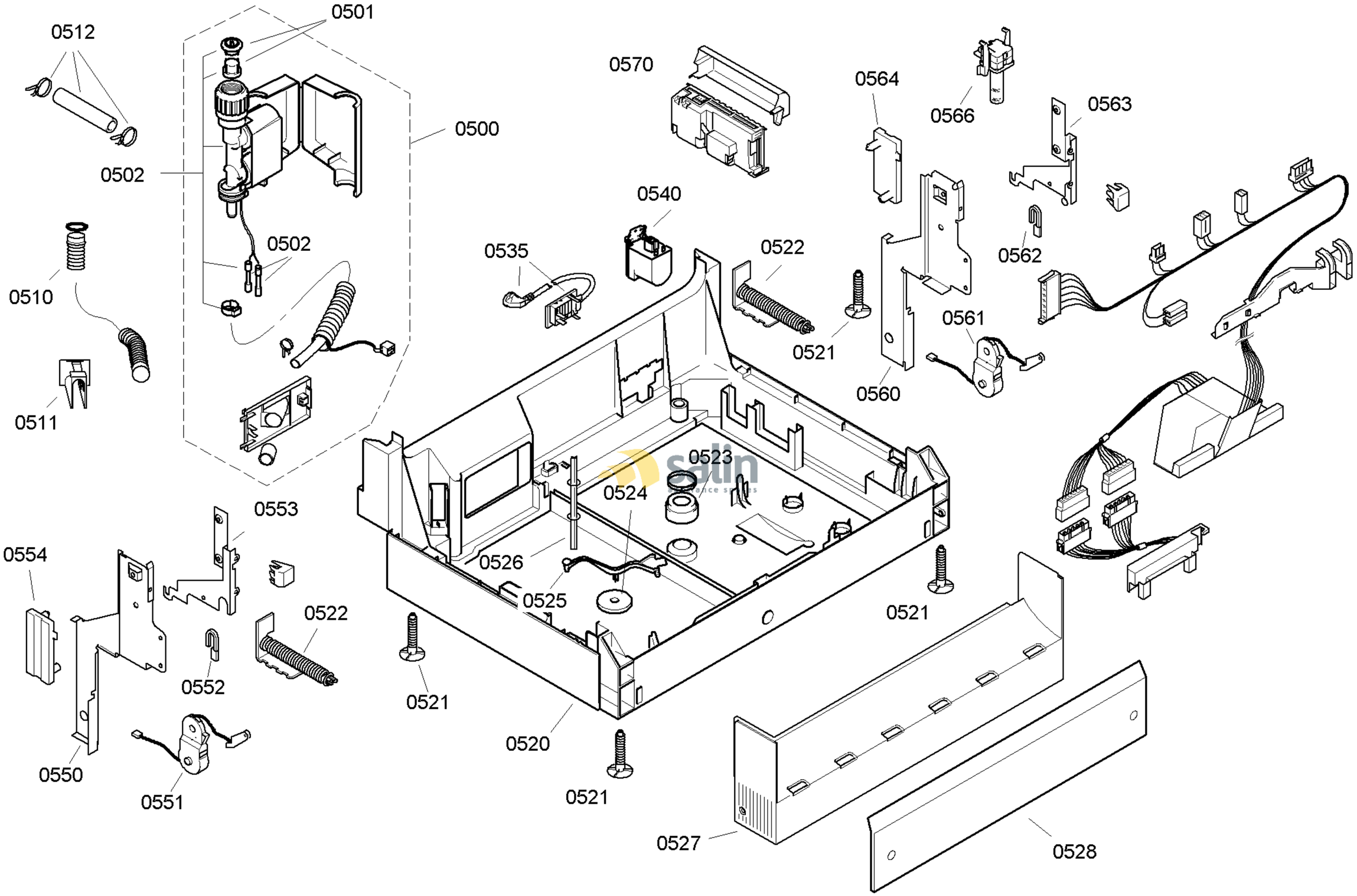

58300000124935 aet 000 b 5/6

FAMILY : SGS09T03EU
MODEL NO: SGS09T03EU/01
Check Position No/Part No or Replacement No

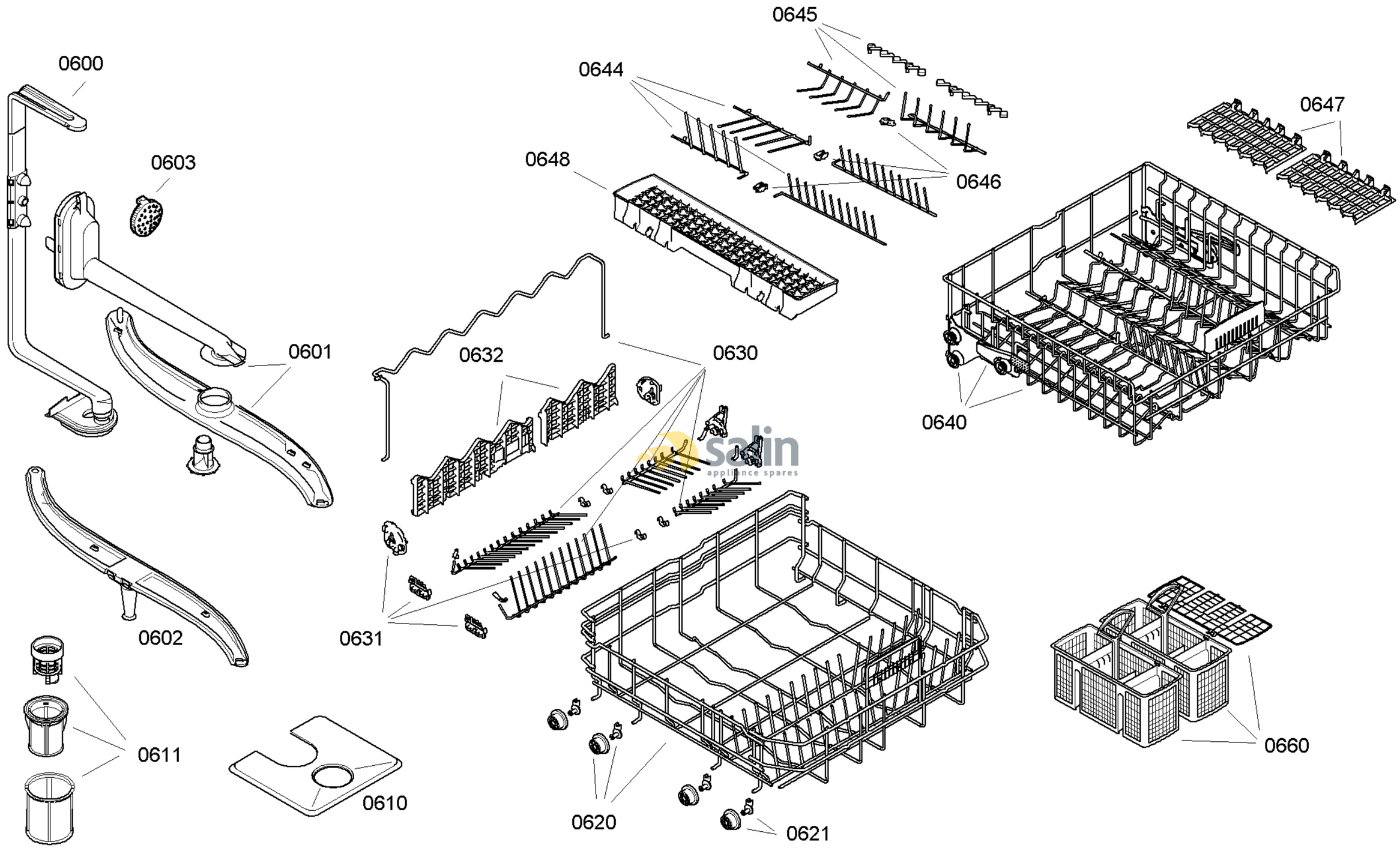

58300000124935 aet 000 b 6/6

FAMILY : SGS09T03EU
MODEL NO: SGS09T03EU/01
Check Position No/Part No or Replacement No