0199

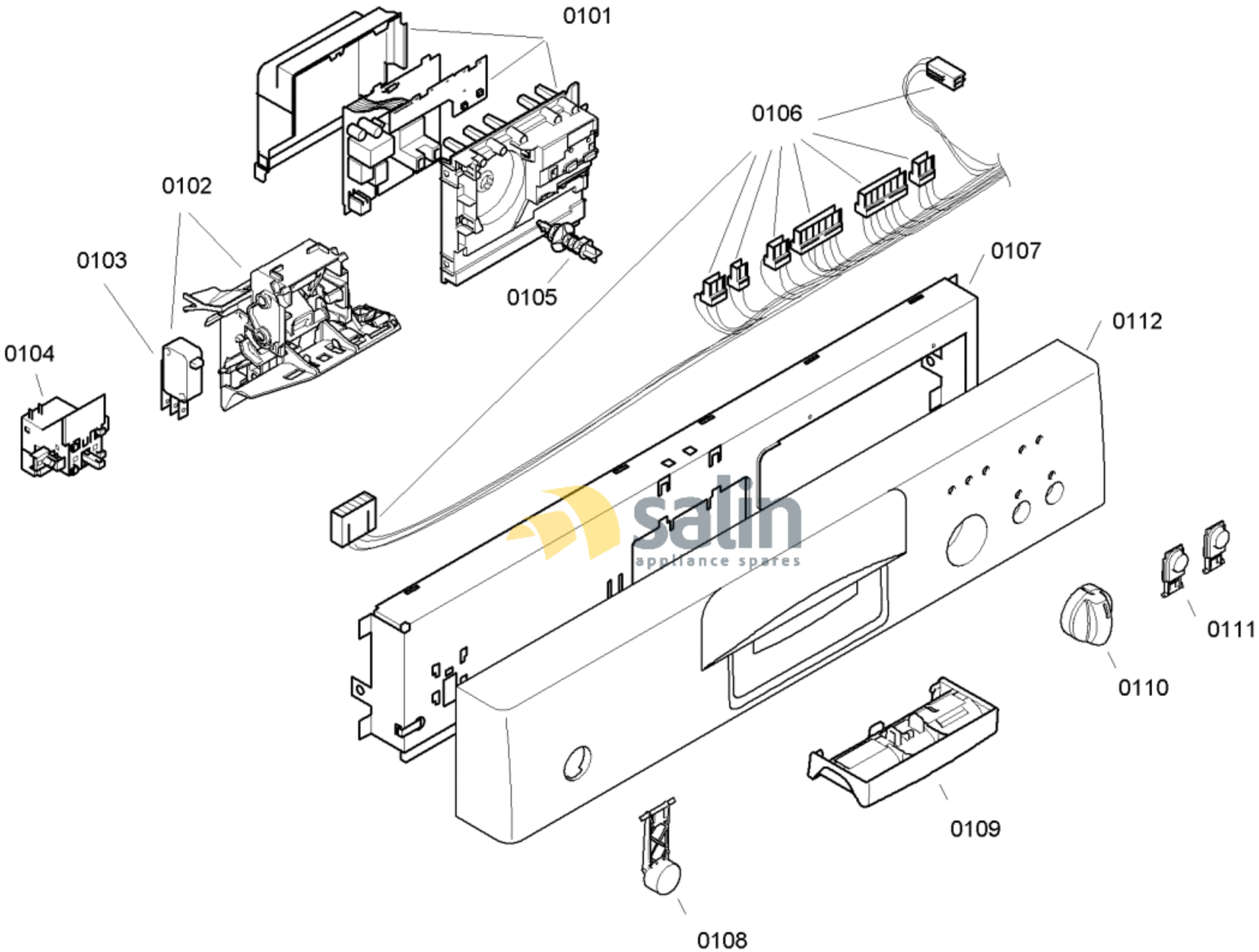

satin
appliance spares

58300000130470 aet 000 a 1/6

FAMILY : SGS43E12II

MODEL NO: SGS43E12II/90

Check Position No/Part No or Replacement No

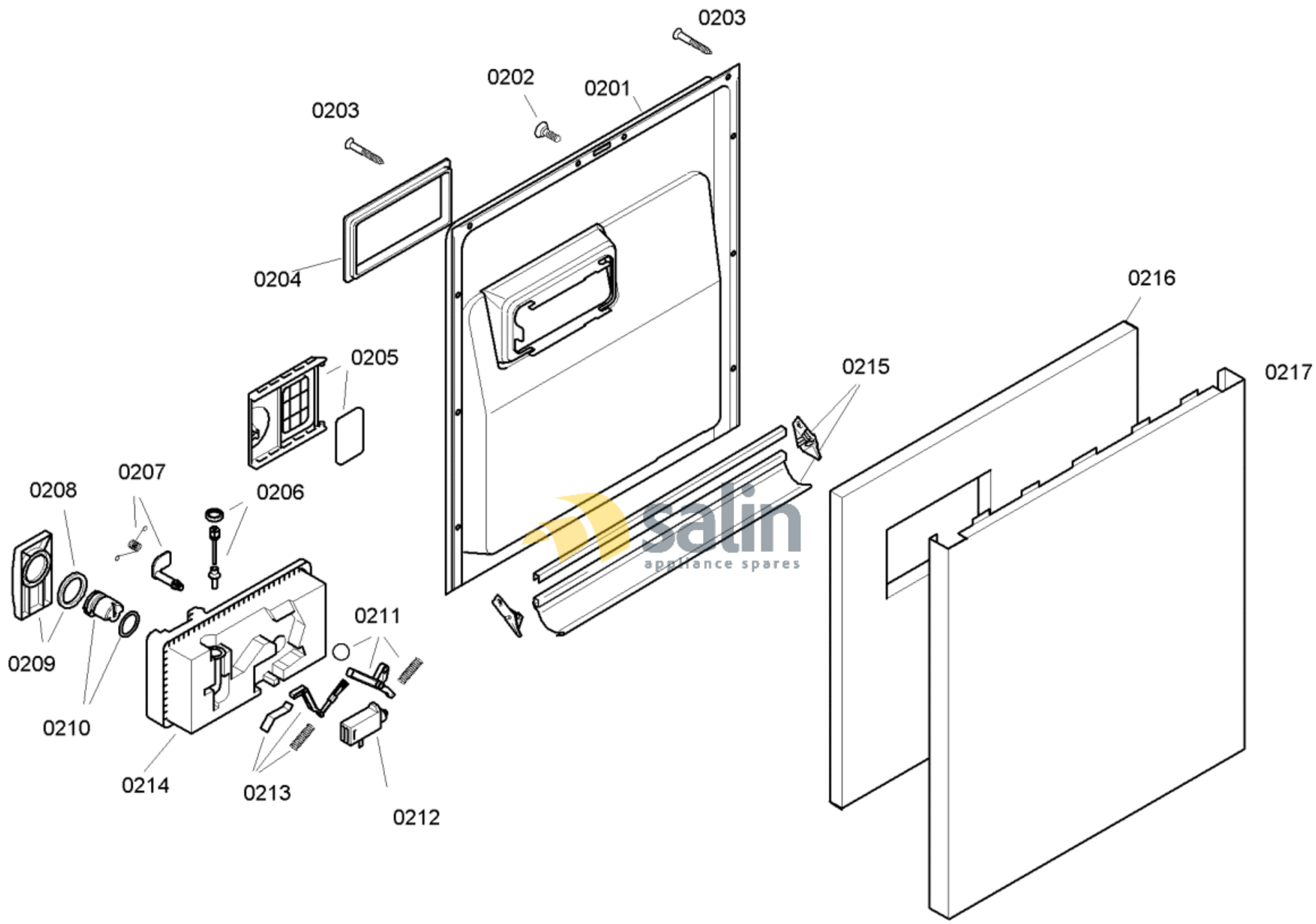

58300000130470 aet 000 a 2/6

FAMILY : SGS43E12II

MODEL NO: SGS43E12II/90

Check Position No/Part No or Replacement No

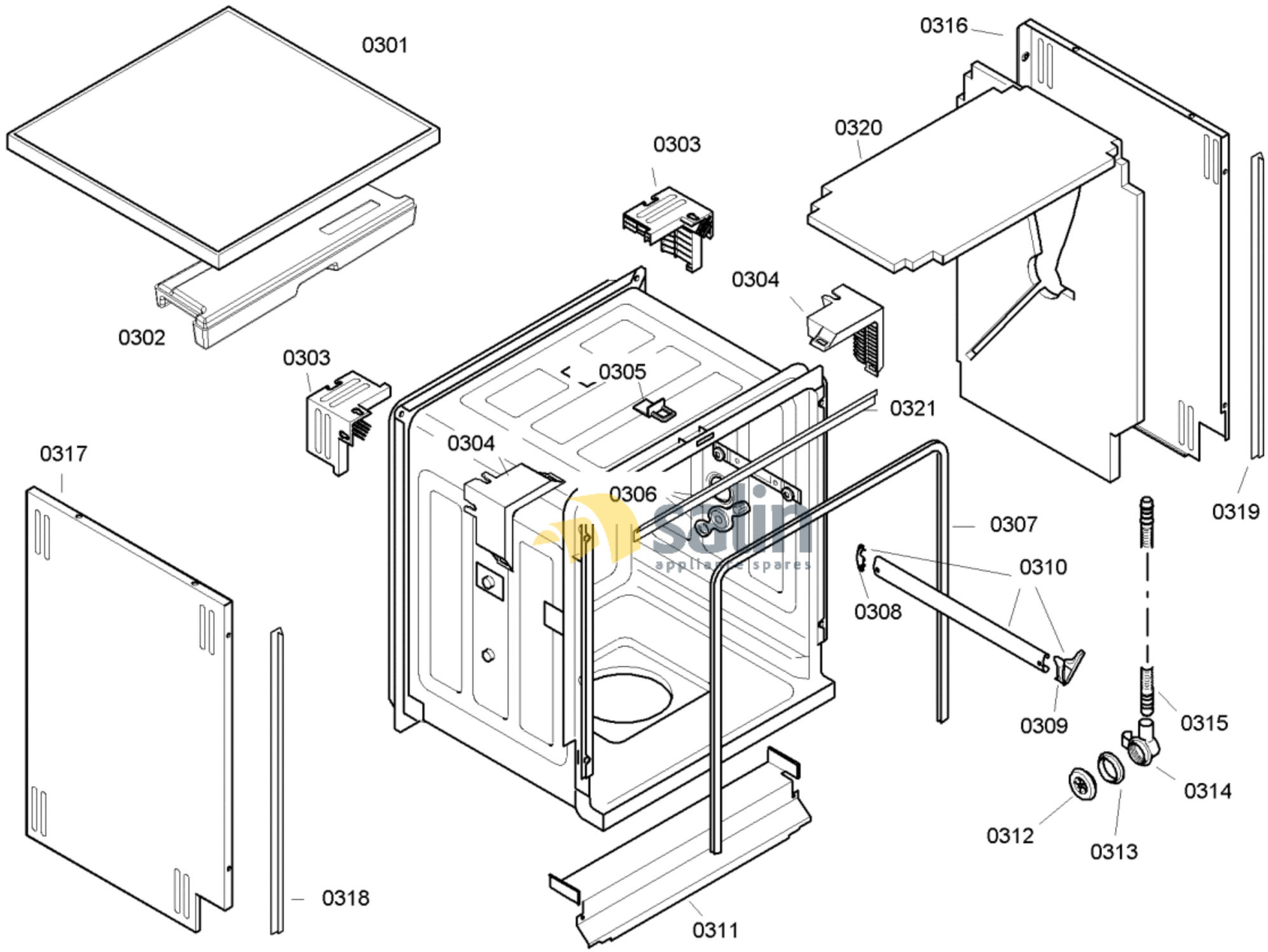

58300000130470 aet 000 a 3/6

FAMILY : SGS43E12II

MODEL NO: SGS43E12II/90

Check Position No/Part No or Replacement No

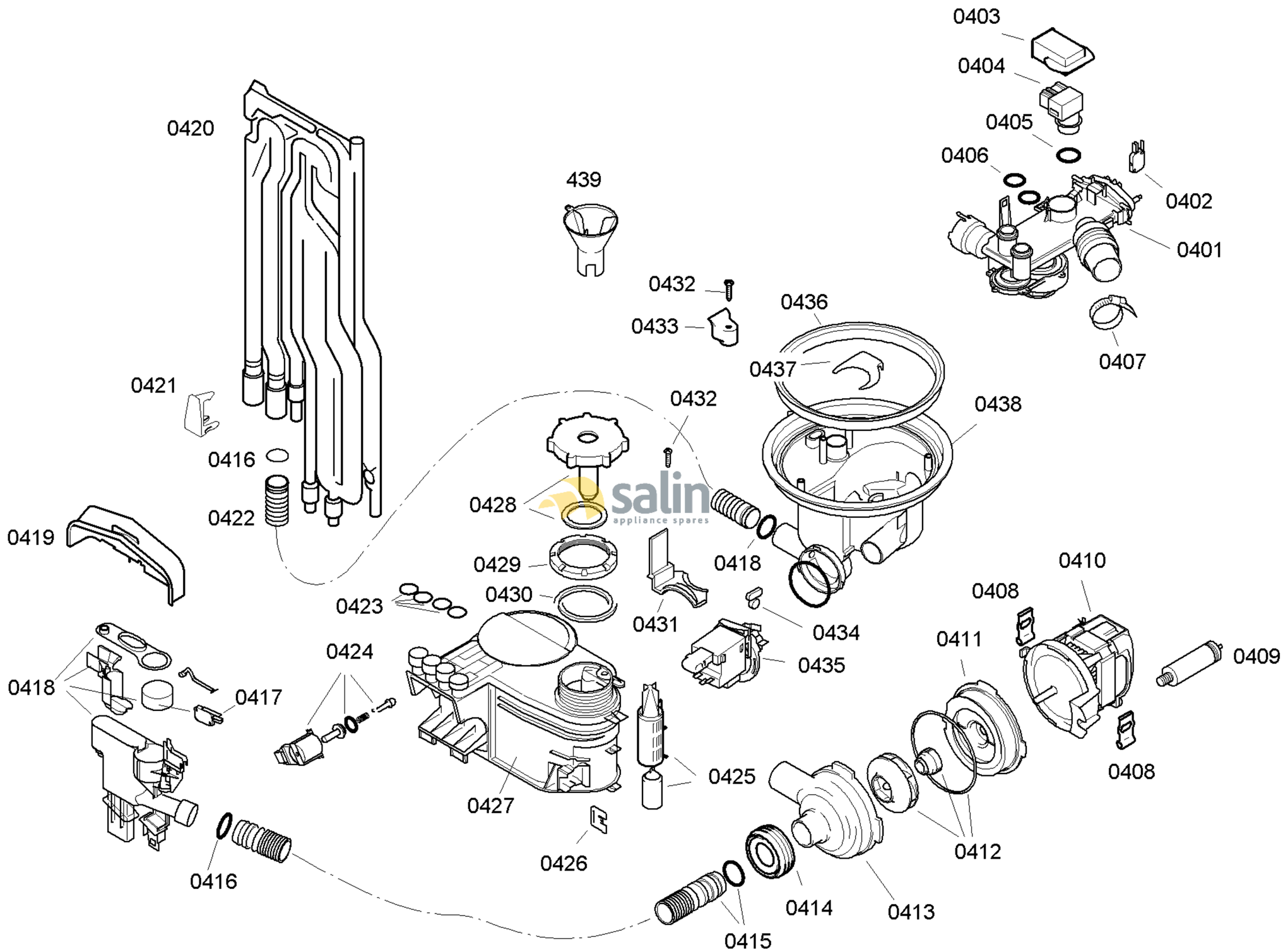

58300000130470 aet 000 a 4/6

FAMILY : SGS43E12II
MODEL NO: SGS43E12II/90
Check Position No/Part No or Replacement No

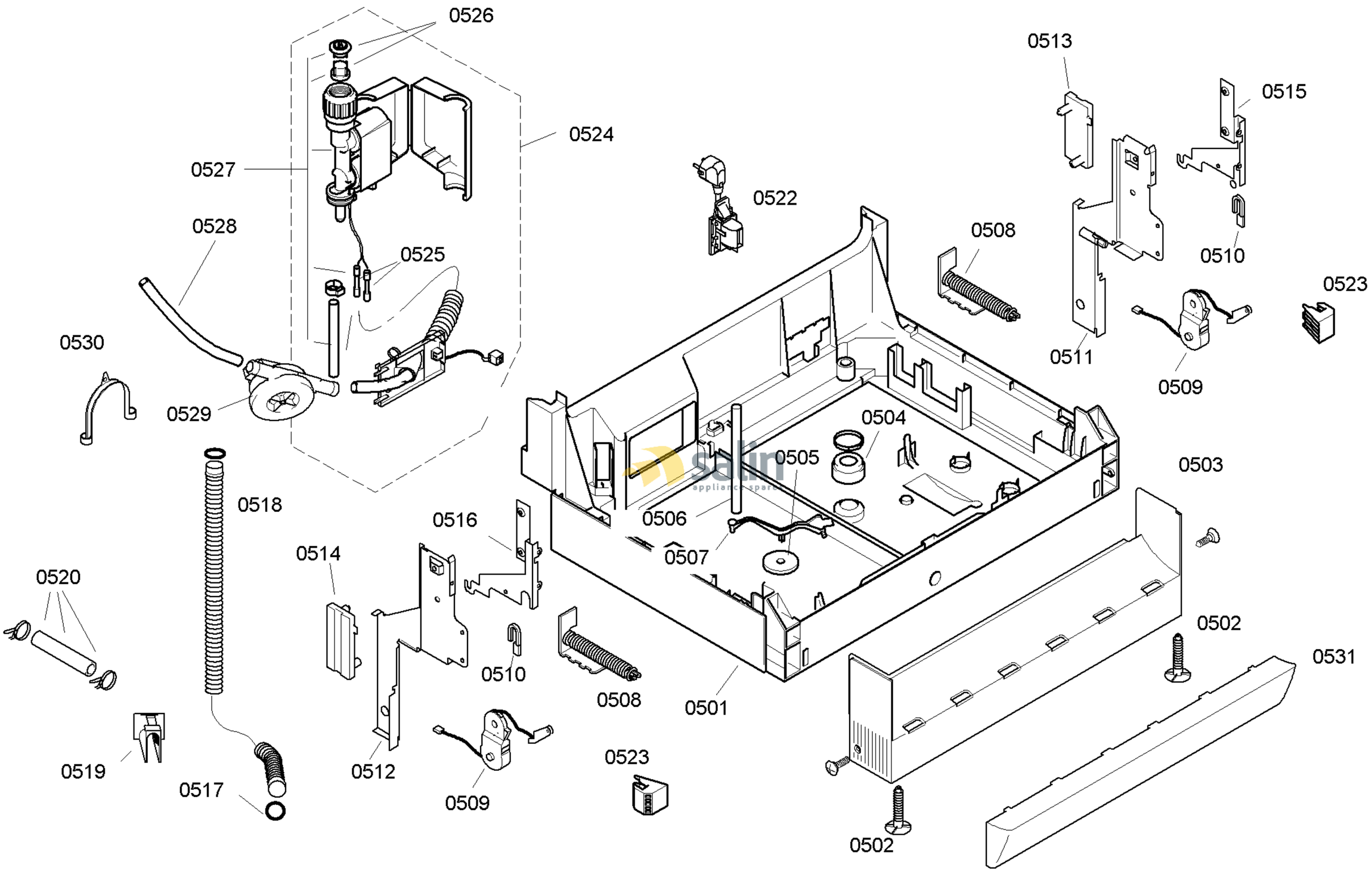

58300000130470 aet 000 a 5/6

FAMILY : SGS43E12II
MODEL NO: SGS43E12II/90
Check Position No/Part No or Replacement No

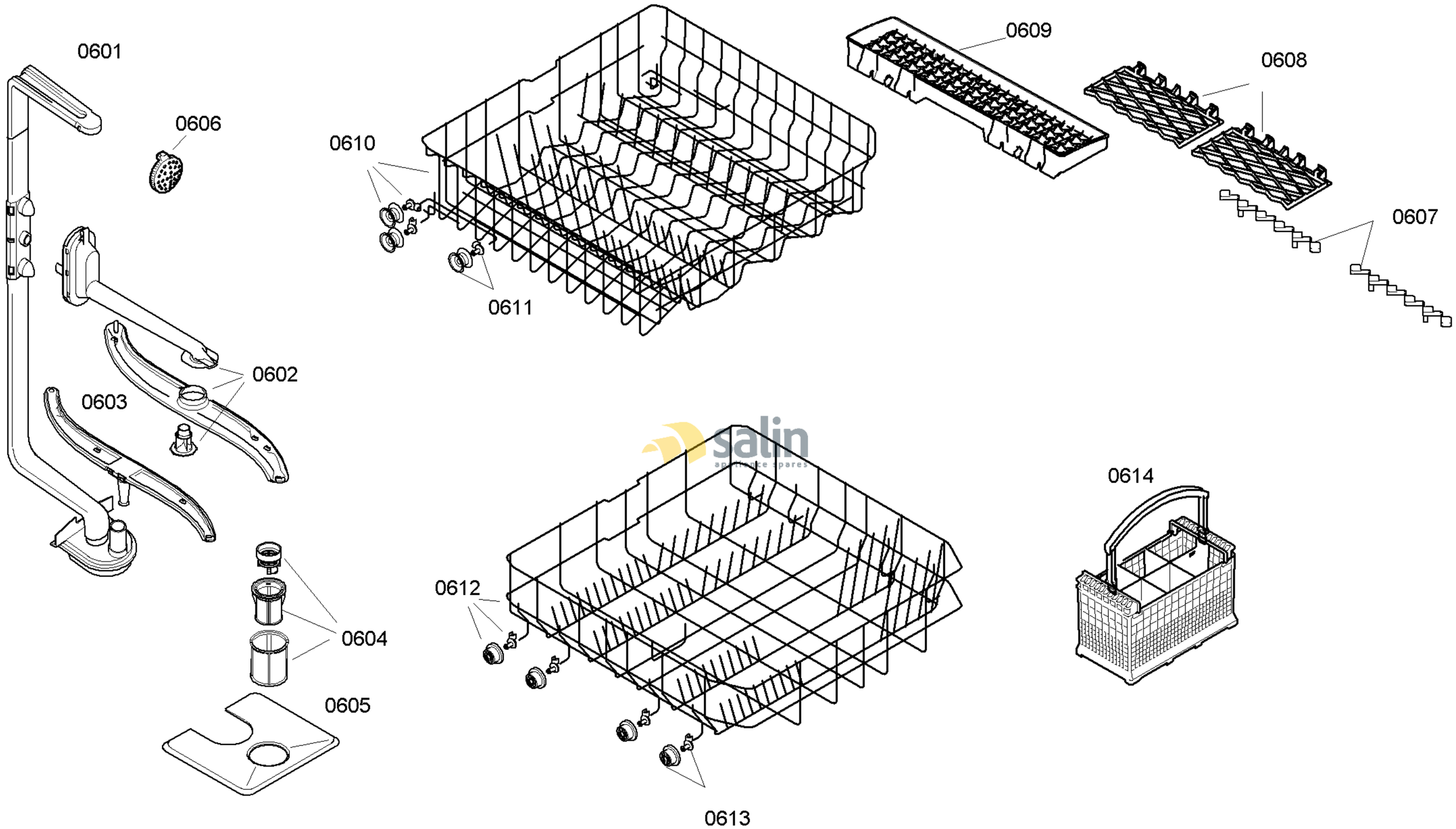

58300000130470 aet 000 a 6/6

FAMILY : SGS43E12II
MODEL NO: SGS43E12II/90
Check Position No/Part No or Replacement No