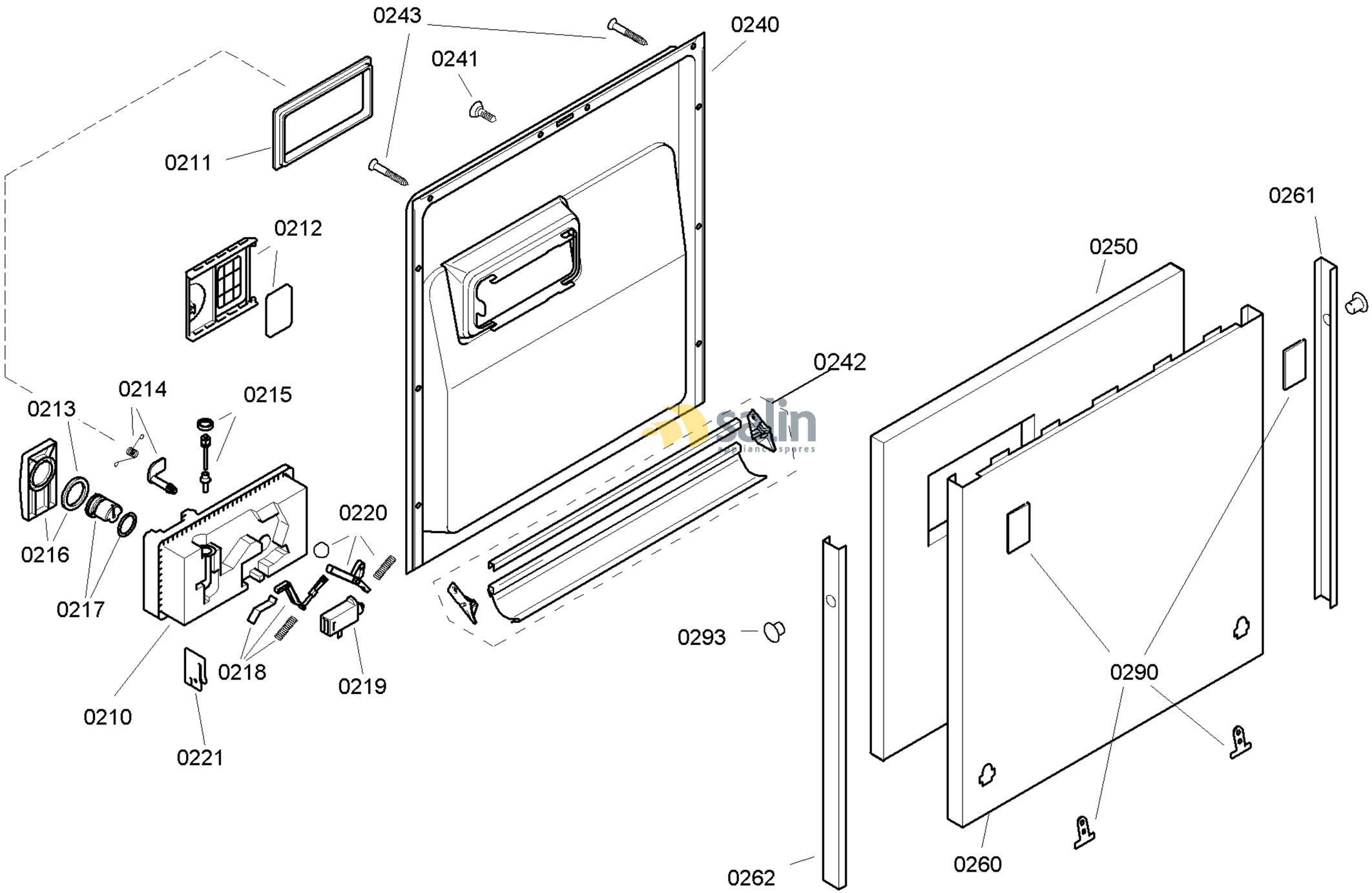

58300000114713 aet 000 b 2/6

FAMILY : SGV55M03AU
MODEL NO: SGV55M03AU/70
Check Position No/Part No or Replacement No

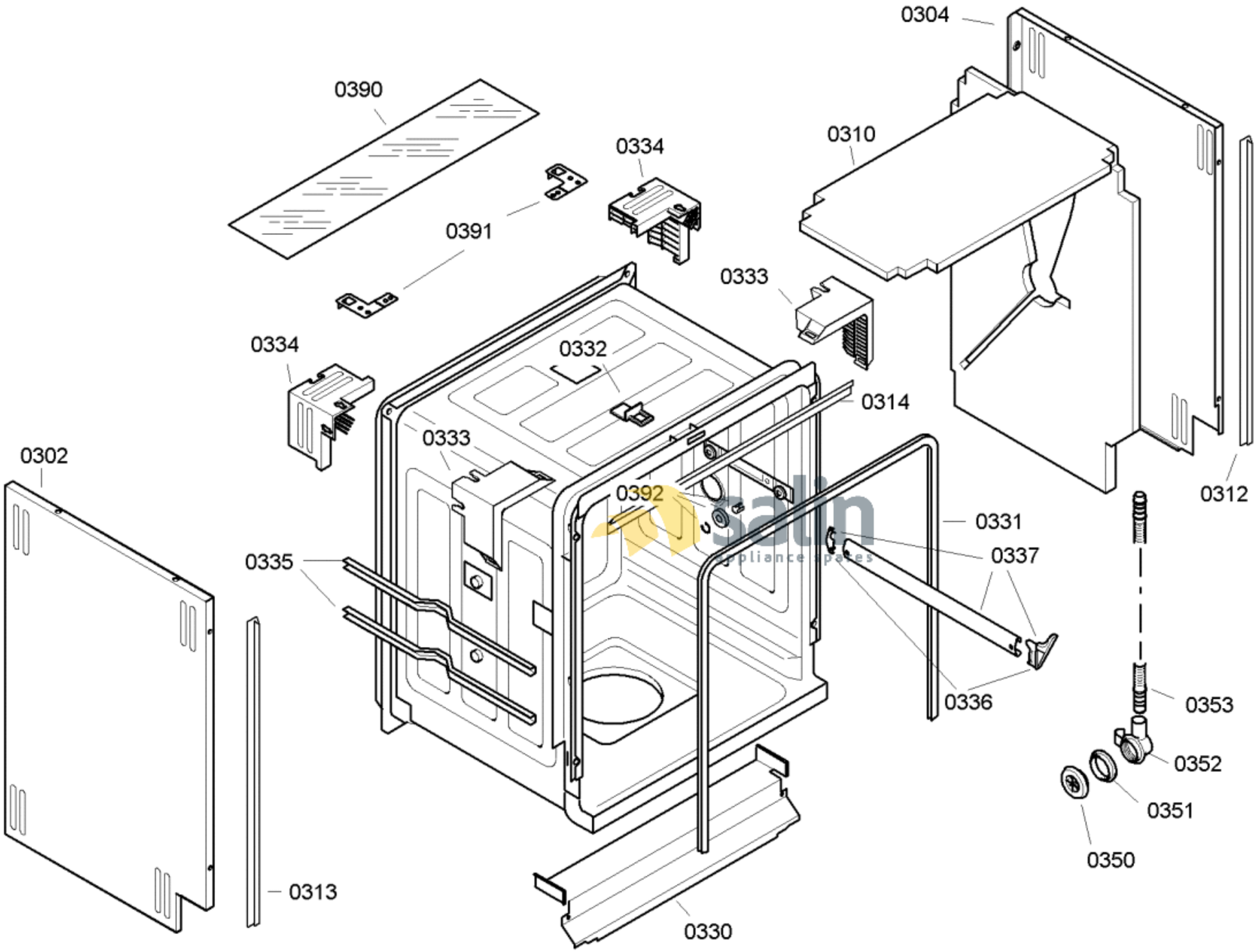

58300000114713 aet 000 b 3/6

FAMILY : SGV55M03AU

MODEL NO: SGV55M03AU/70

Check Position No/Part No or Replacement No

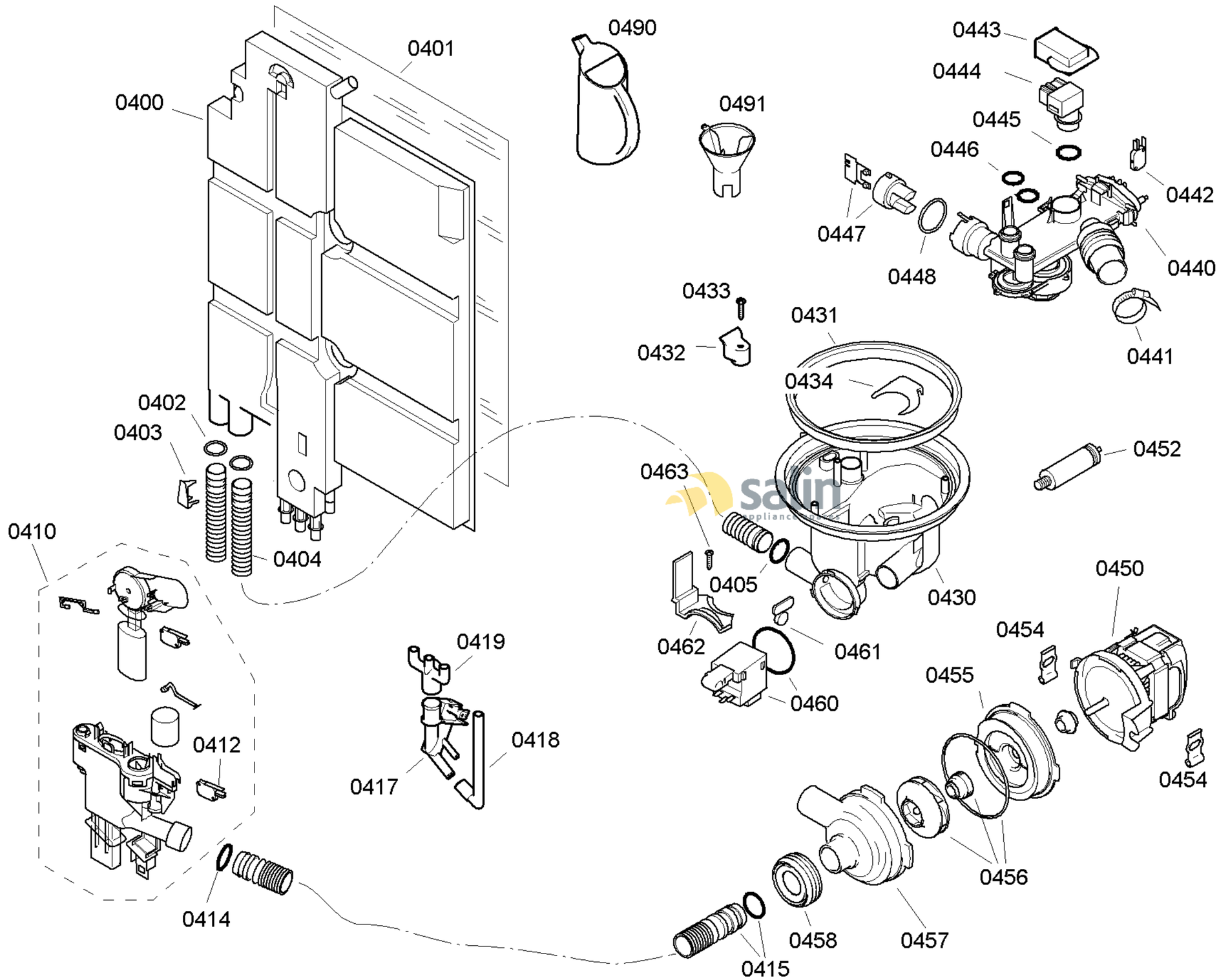

58300000114713 aet 000 b 4/6

FAMILY : SGV55M03AU
MODEL NO: SGV55M03AU/70
Check Position No/Part No or Replacement No

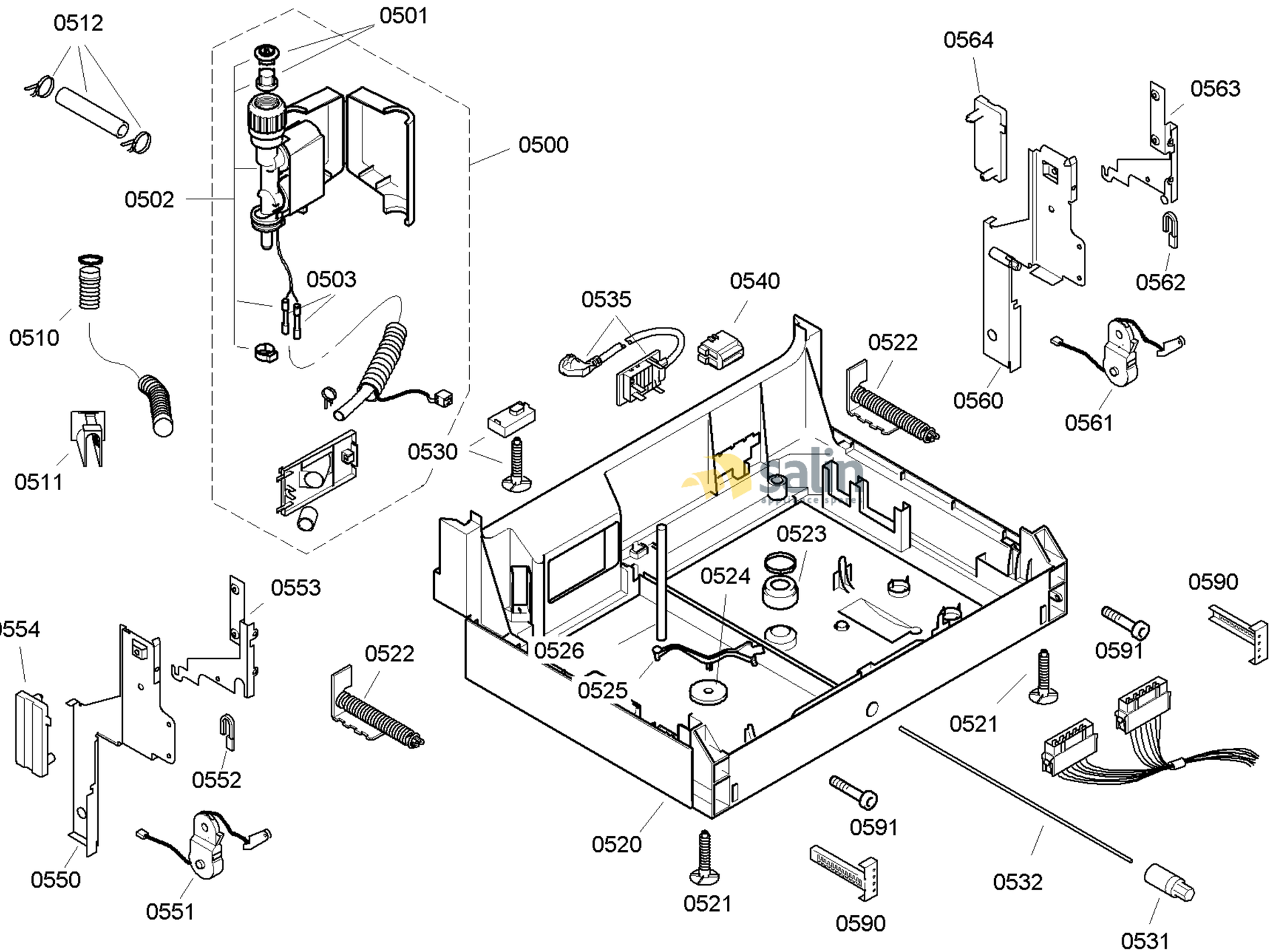

58300000114713 aet 000 b 5/6

FAMILY : SGV55M03AU
MODEL NO: SGV55M03AU/70
Check Position No/Part No or Replacement No

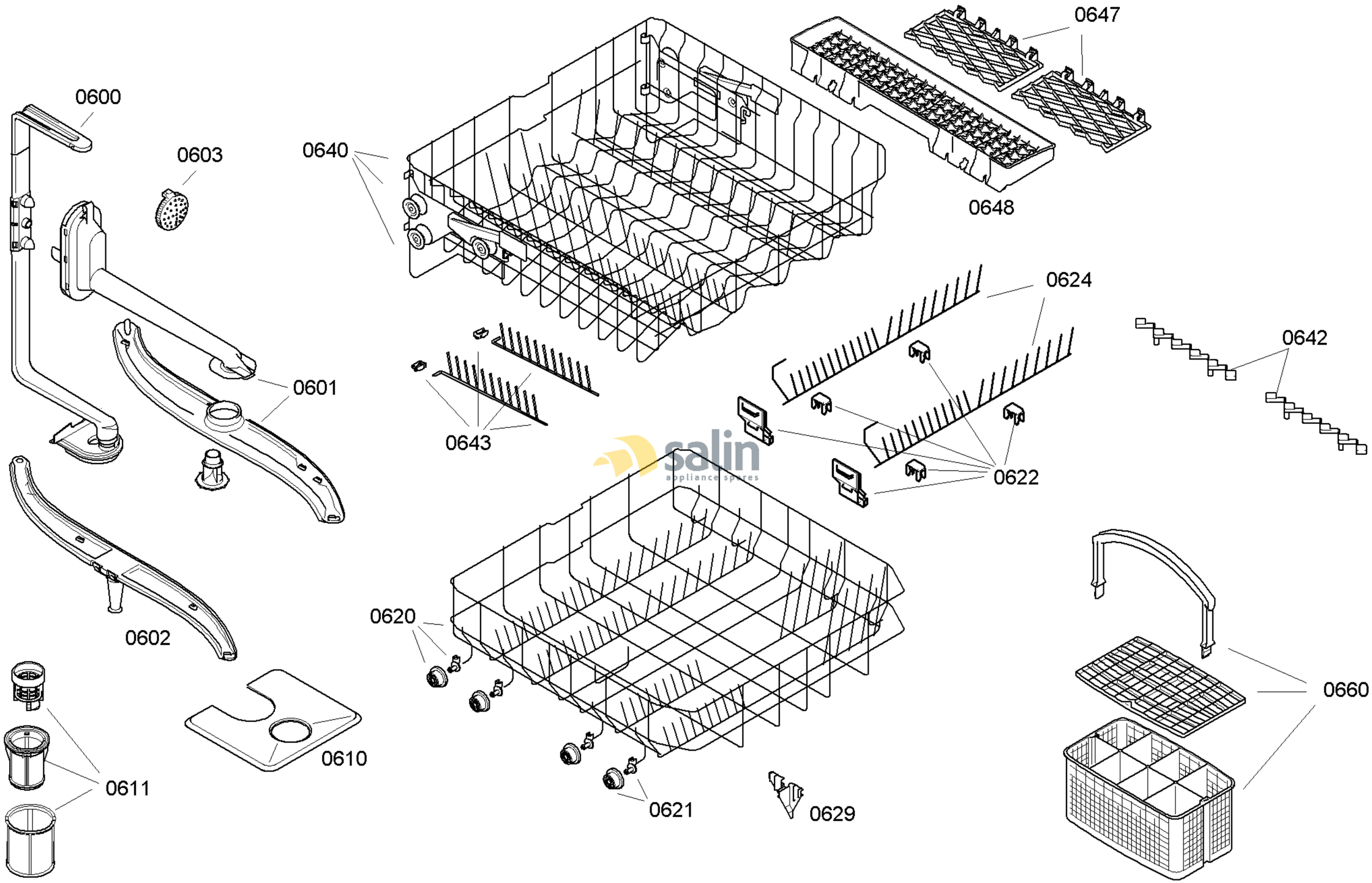

58300000114713 aet 000 b 6/6

FAMILY : SGV55M03AU
MODEL NO: SGV55M03AU/70
Check Position No/Part No or Replacement No