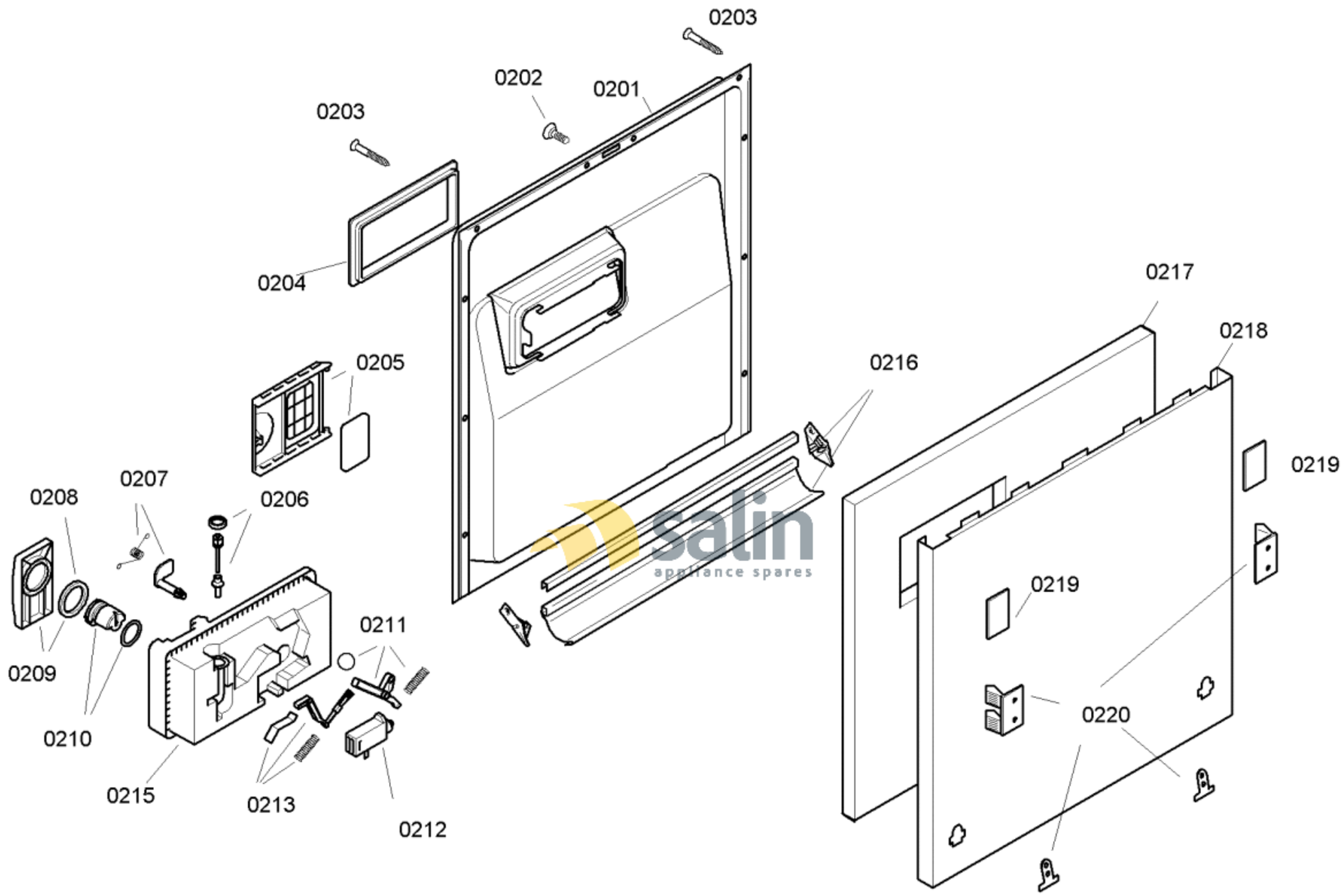

58300000128625 aet 000 a 2/6

FAMILY : SGU55E85SK

MODEL NO: SGU55E85SK/01

Check Position No/Part No or Replacement No

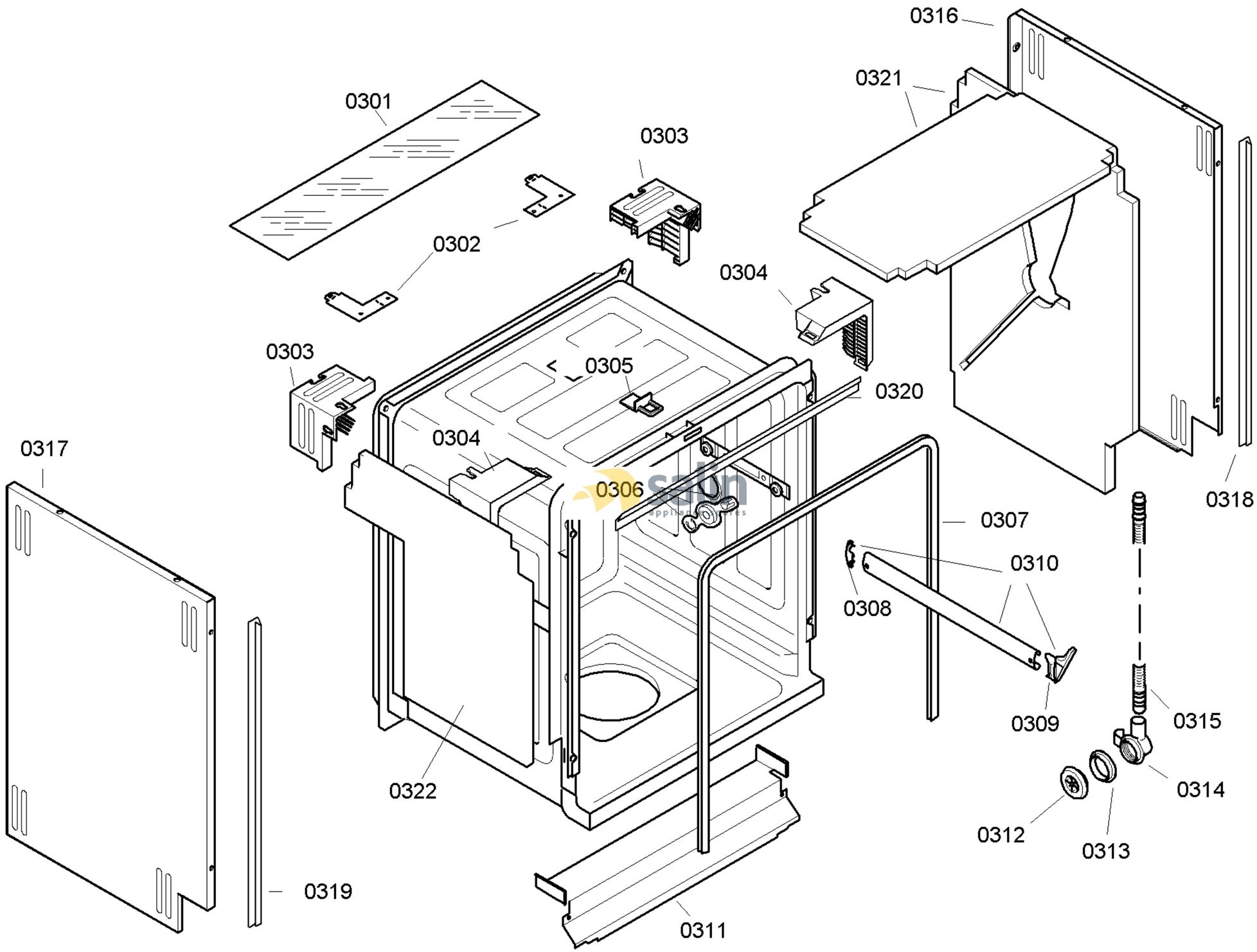

58300000128625 aet 000 a 3/6

FAMILY : SGU55E85SK
MODEL NO: SGU55E85SK/01
Check Position No/Part No or Replacement No

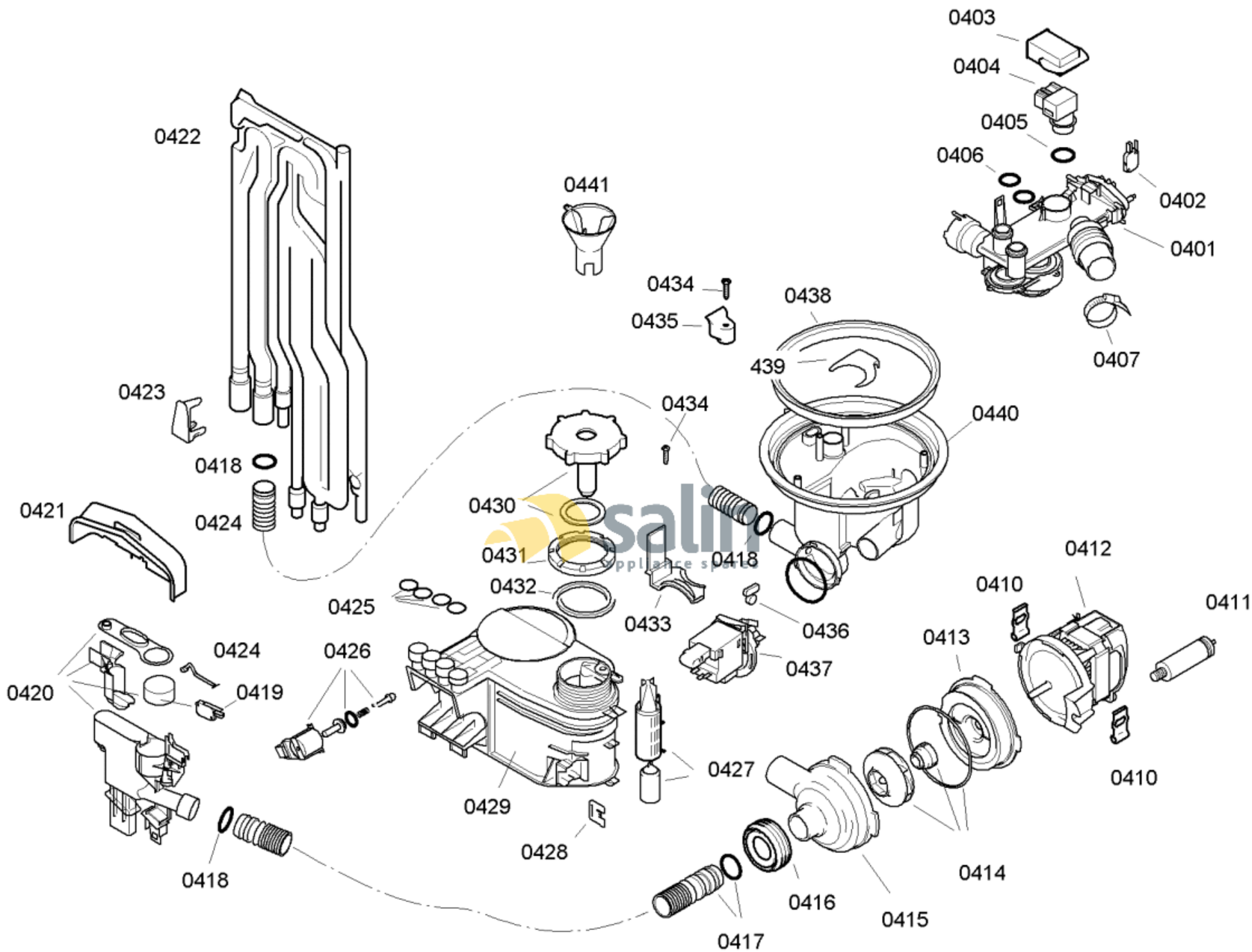

58300000128625 aet 000 a 4/6

FAMILY : SGU55E85SK

MODEL NO: SGU55E85SK/01

Check Position No/Part No or Replacement No

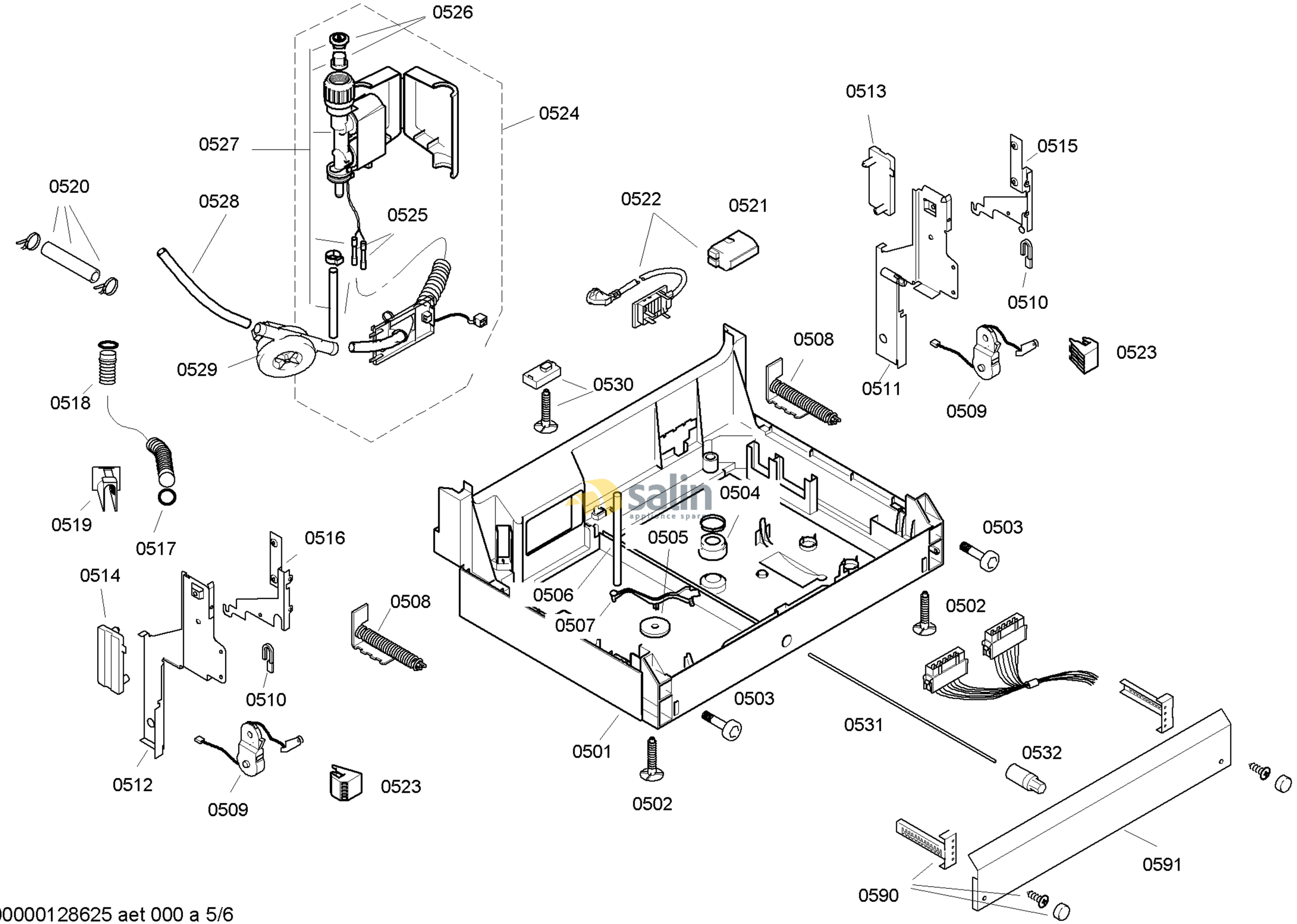

58300000128625 aet 000 a 5/6

FAMILY : SGU55E85SK
MODEL NO: SGU55E85SK/01
Check Position No/Part No or Replacement No

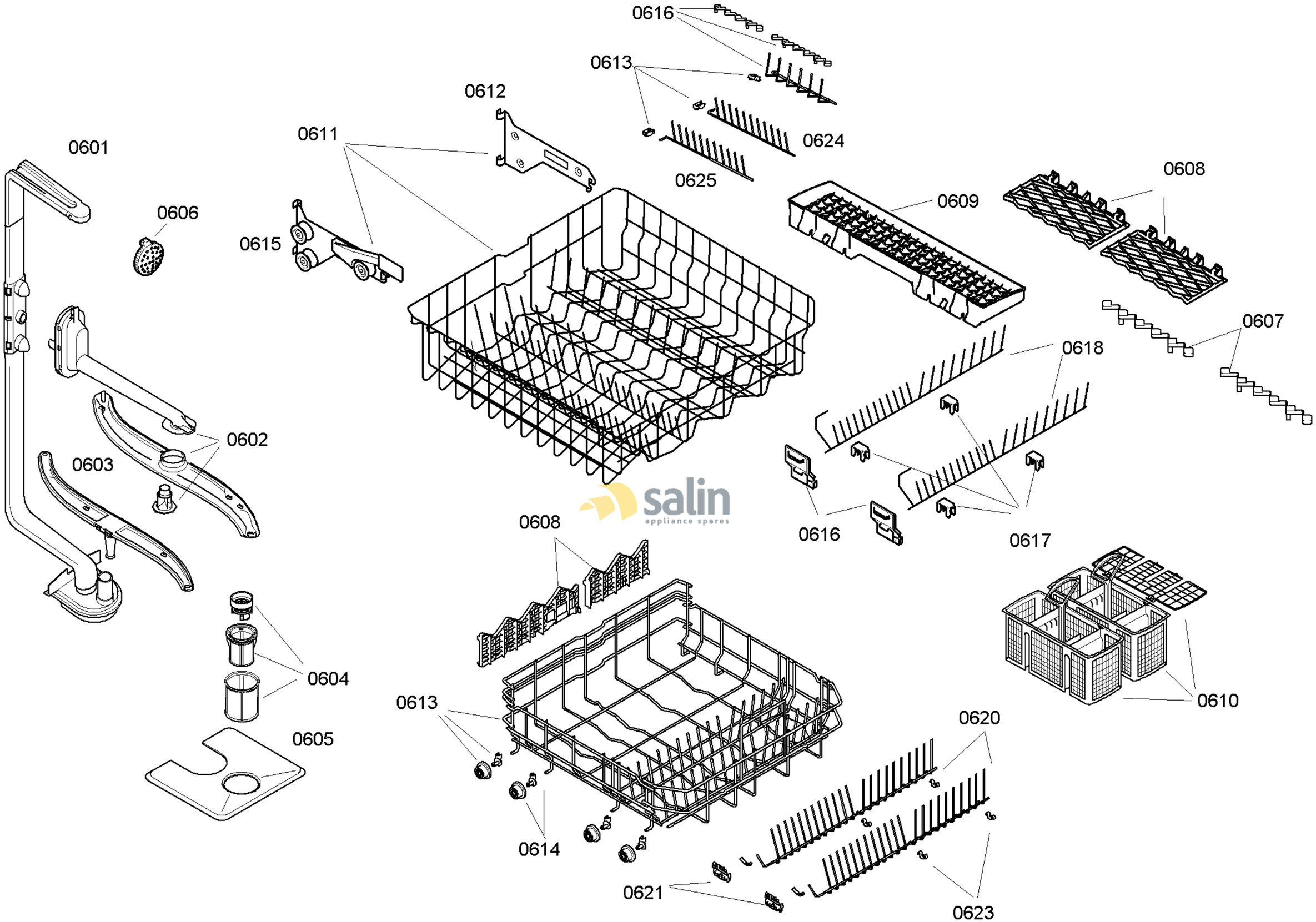

58300000128625 aet 000 a 6/6

FAMILY : SGU55E85SK
MODEL NO: SGU55E85SK/01
Check Position No/Part No or Replacement No