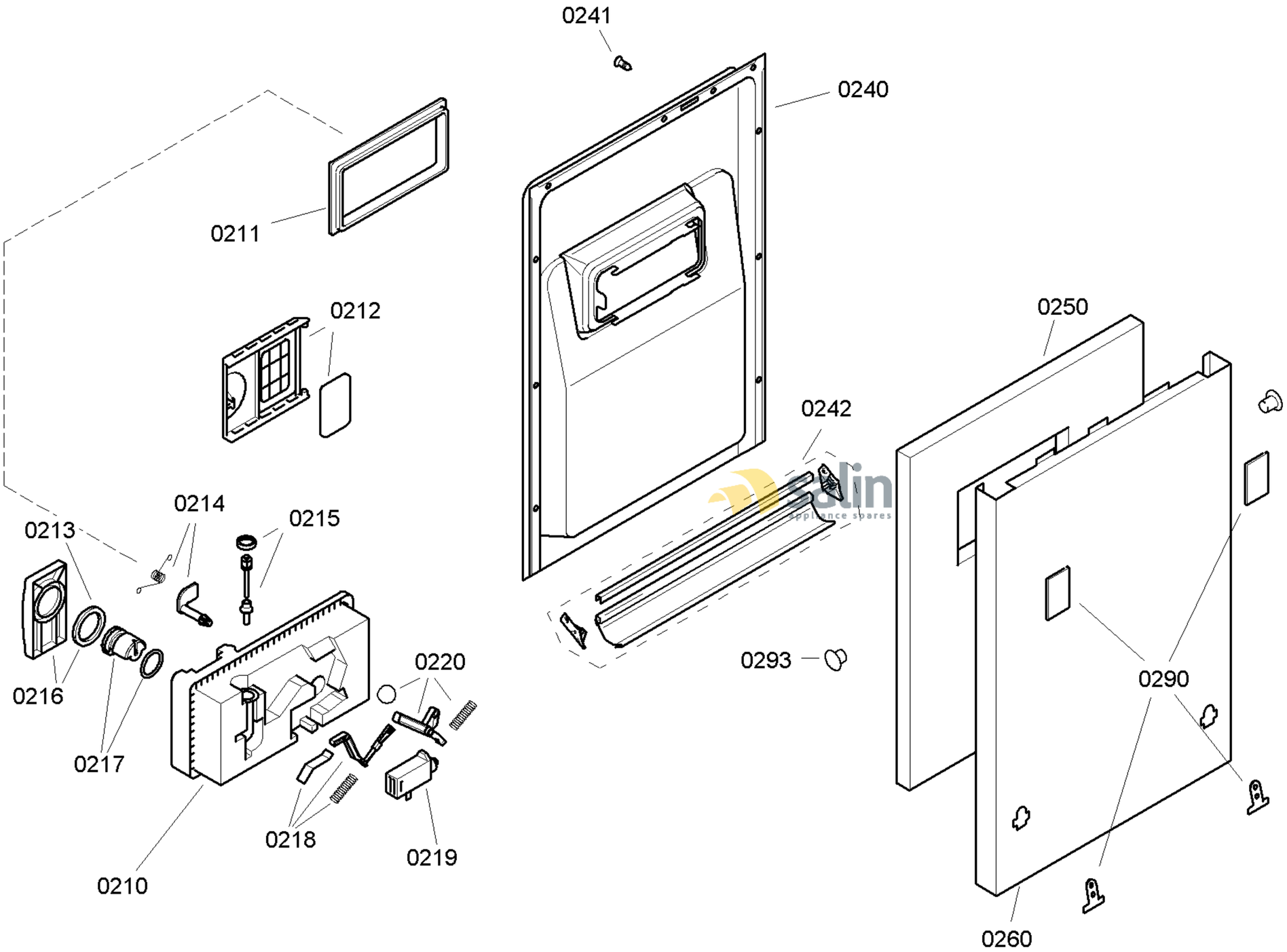

58300000138153 aet 000 a 2/6

FAMILY : SRI33E04EU
MODEL NO: SRI33E04EU/14
Check Position No/Part No or Replacement No

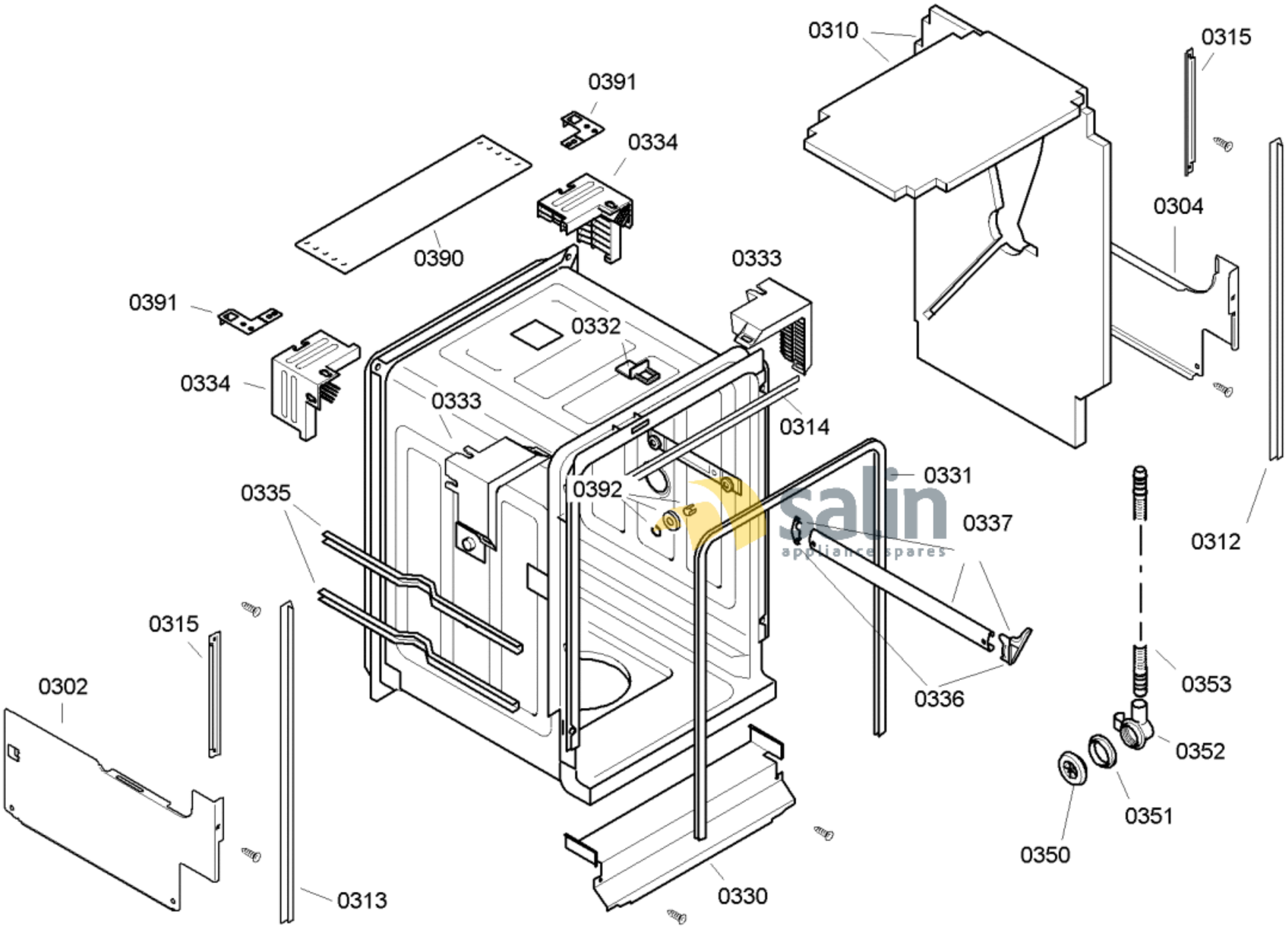

58300000138153 aet 000 a 3/6

FAMILY : SRI33E04EU

MODEL NO: SRI33E04EU/14

Check Position No/Part No or Replacement No

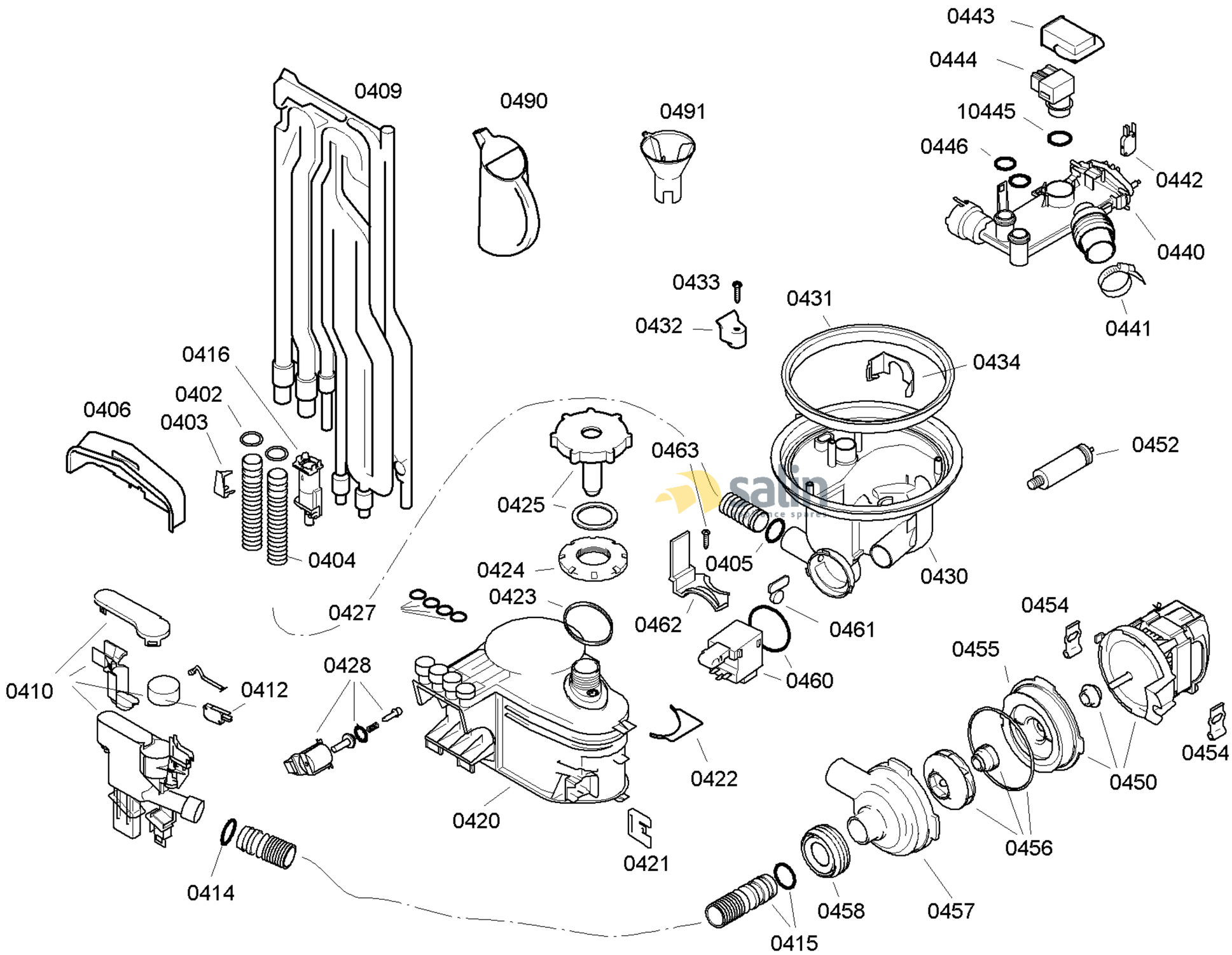

58300000138153 aet 000 a 4/6

FAMILY : SRI33E04EU
MODEL NO: SRI33E04EU/14
Check Position No/Part No or Replacement No

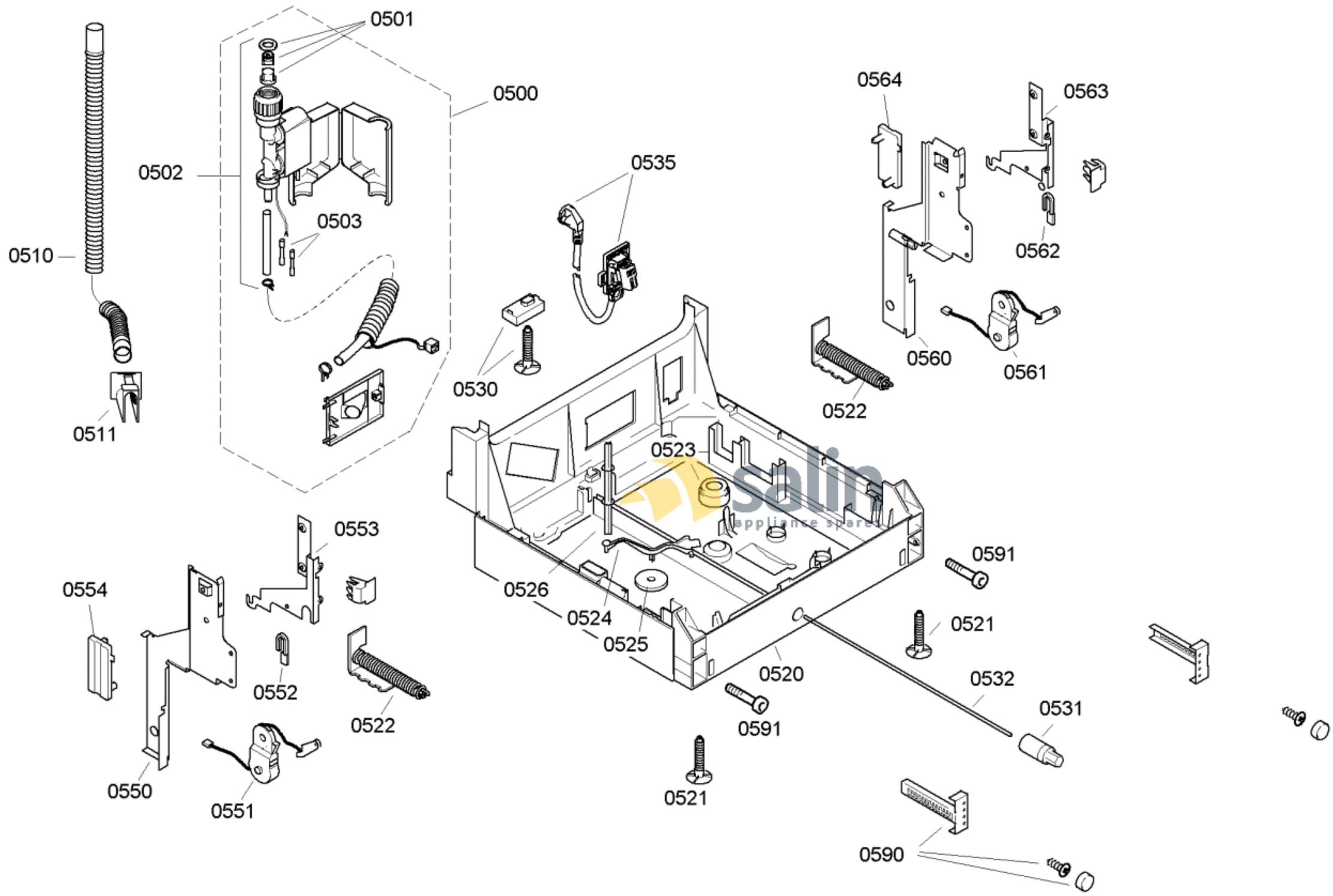

58300000138153 aet 000 a 5/6

FAMILY : SRI33E04EU

MODEL NO: SRI33E04EU/14

Check Position No/Part No or Replacement No

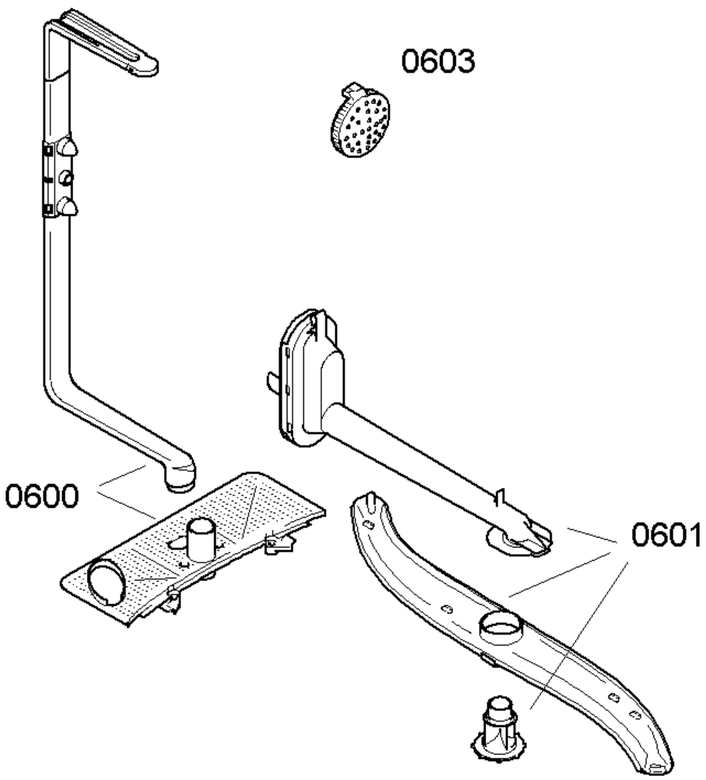

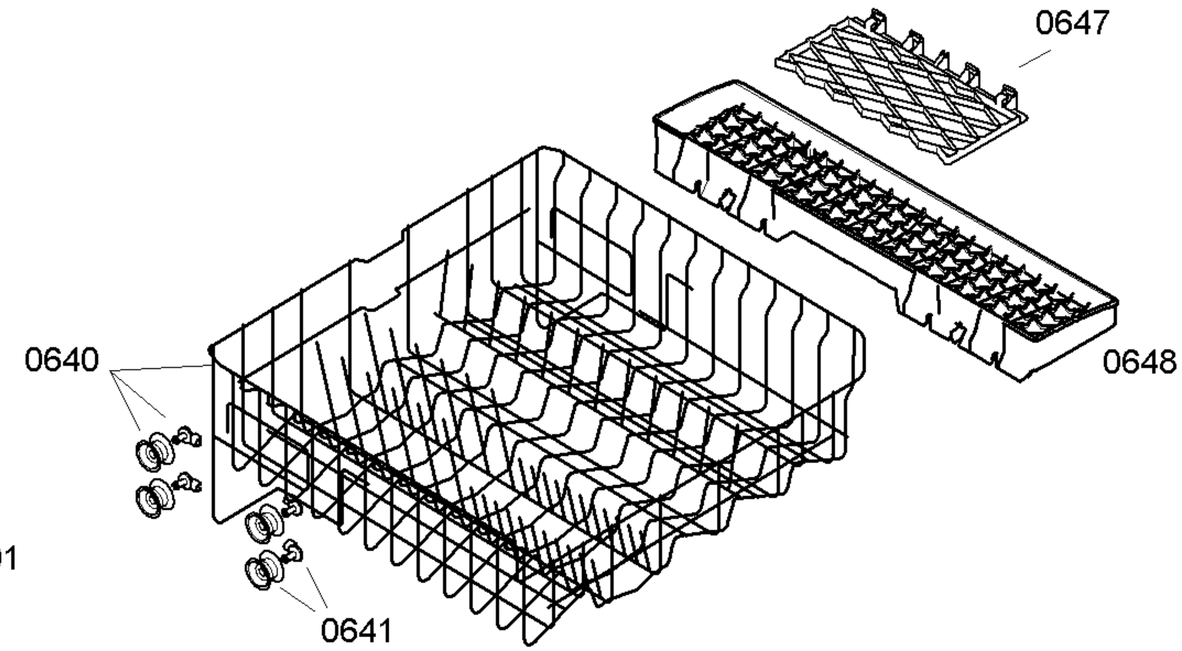

salin
appliance spares

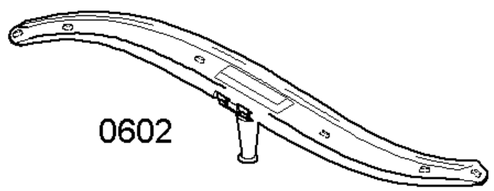

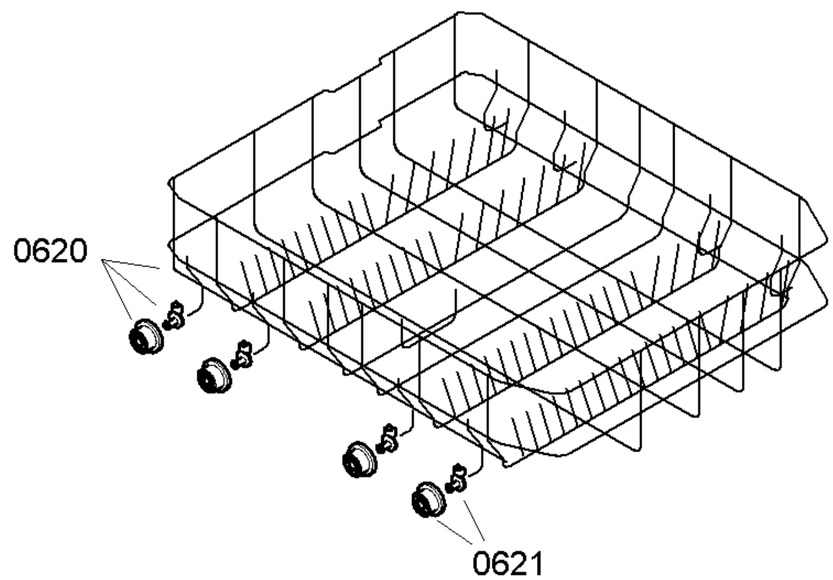

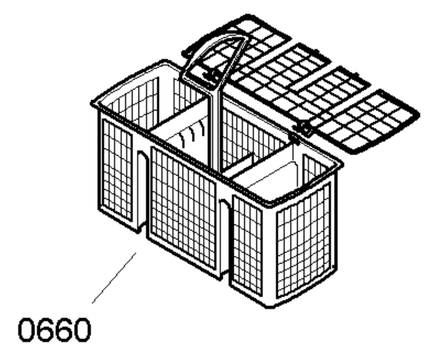

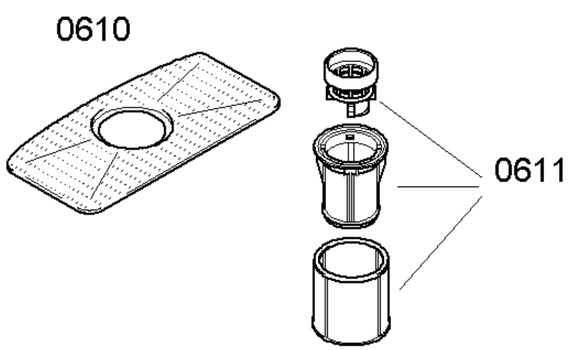

58300000138153 aet 000 a 6/6

FAMILY : SRI33E04EU
MODEL NO: SRI33E04EU/14
Check Position No/Part No or Replacement No