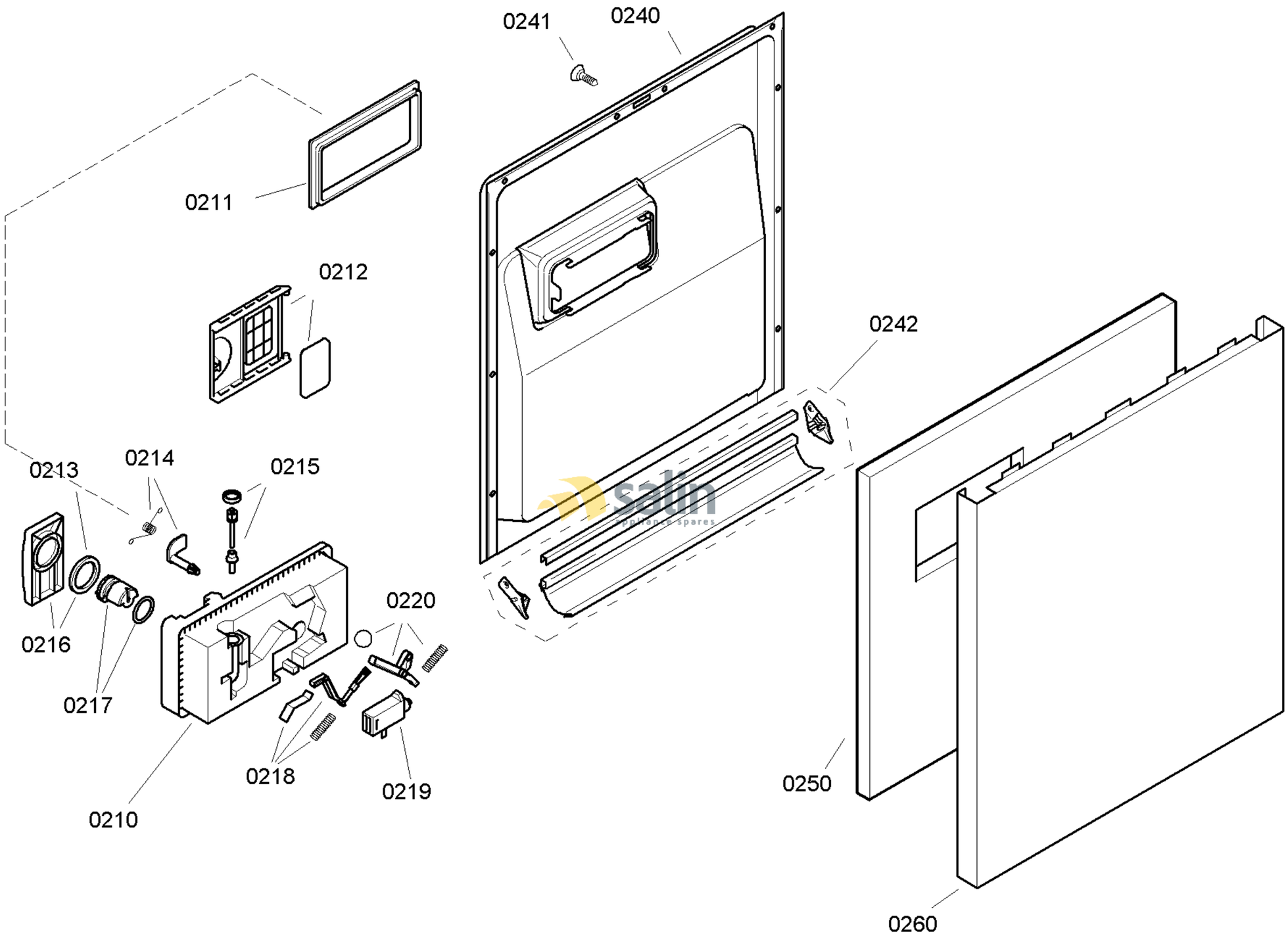

58300000118185 aet 000 a 2/6

FAMILY : SGU59T75EU
MODEL NO: SGU59T75EU/07
Check Position No/Part No or Replacement No

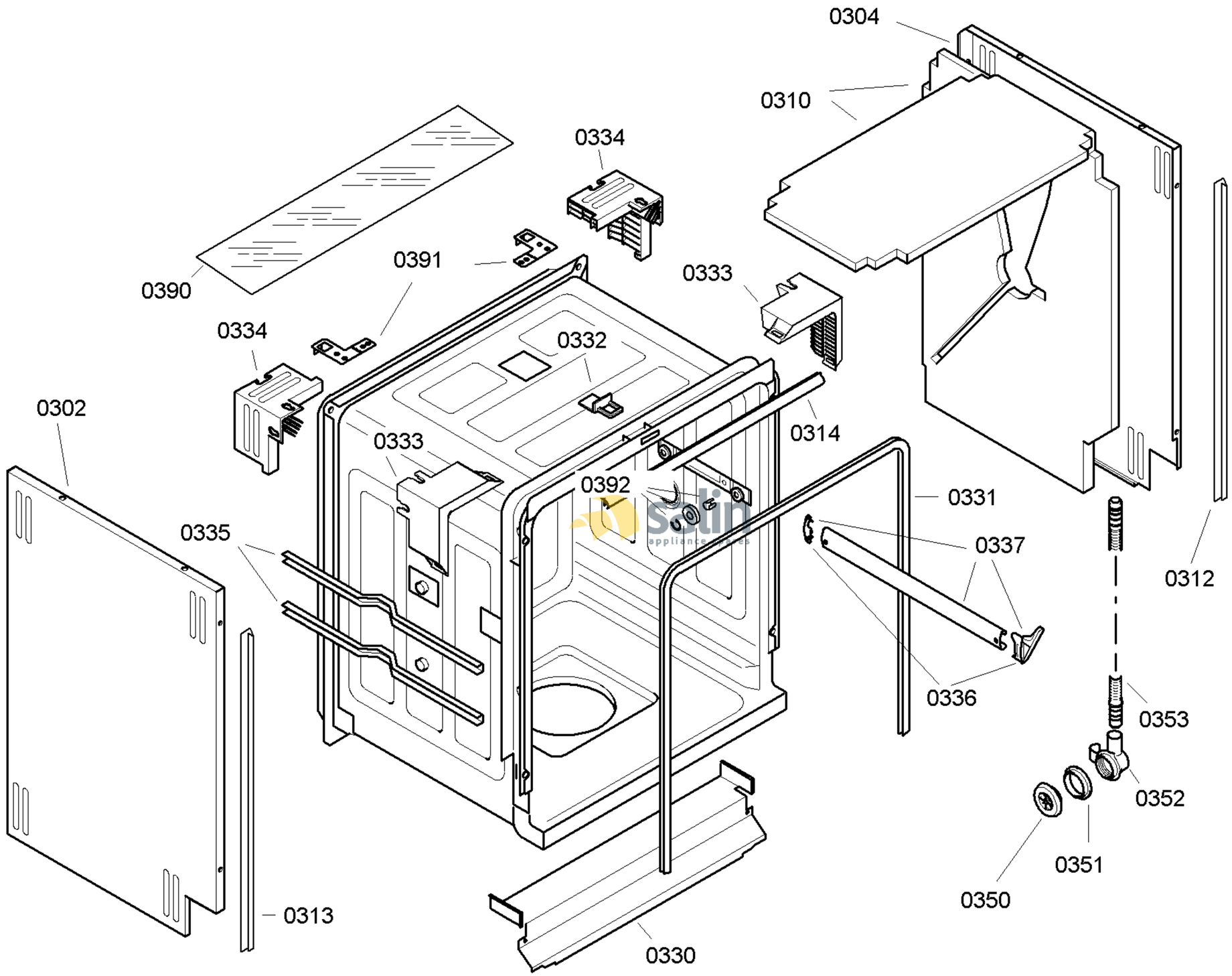

58300000118185 aet 000 a 3/6

FAMILY : SGU59T75EU
MODEL NO: SGU59T75EU/07
Check Position No/Part No or Replacement No

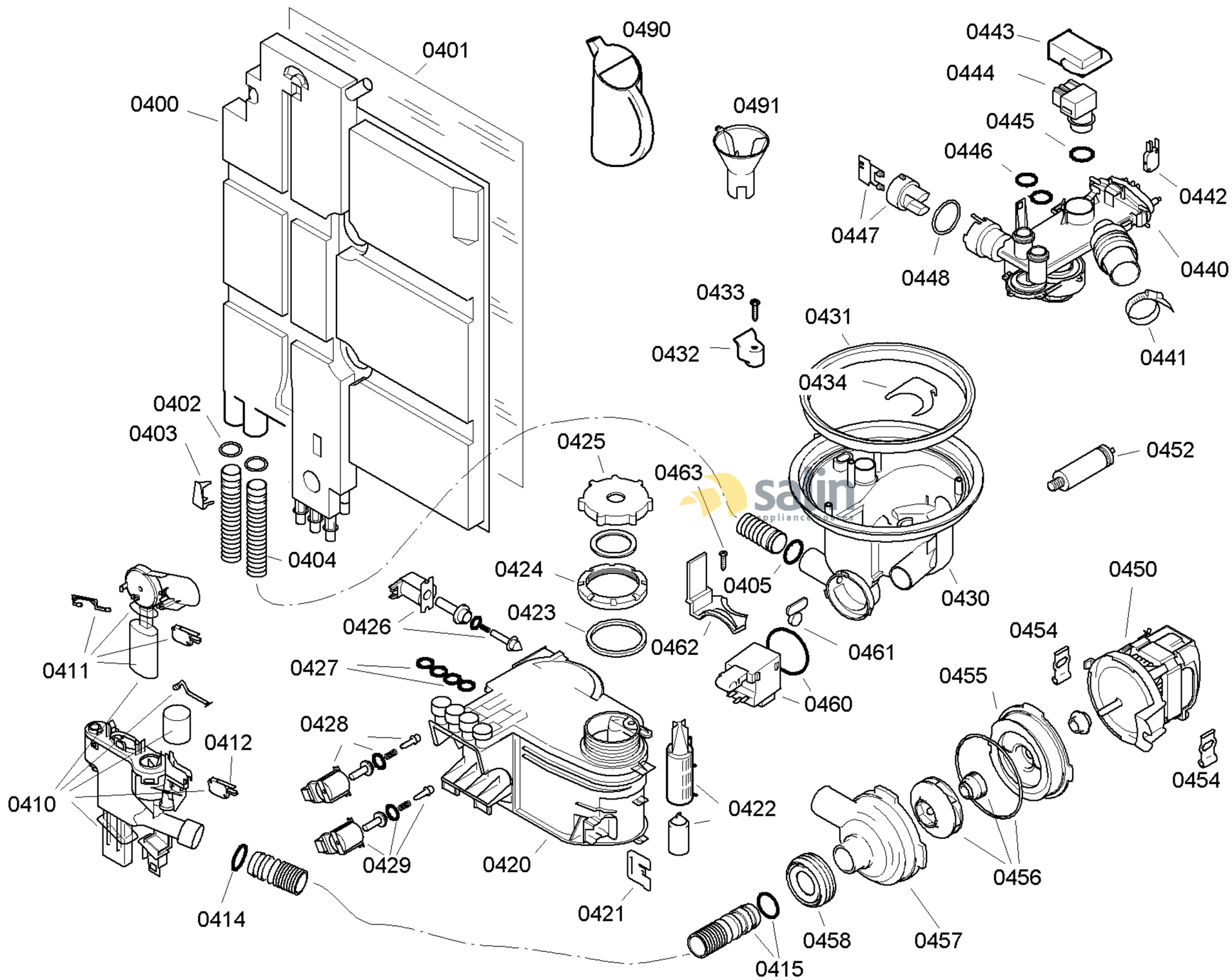

58300000118185 aet 000 a 4/6

FAMILY : SGU59T75EU
MODEL NO: SGU59T75EU/07
Check Position No/Part No or Replacement No

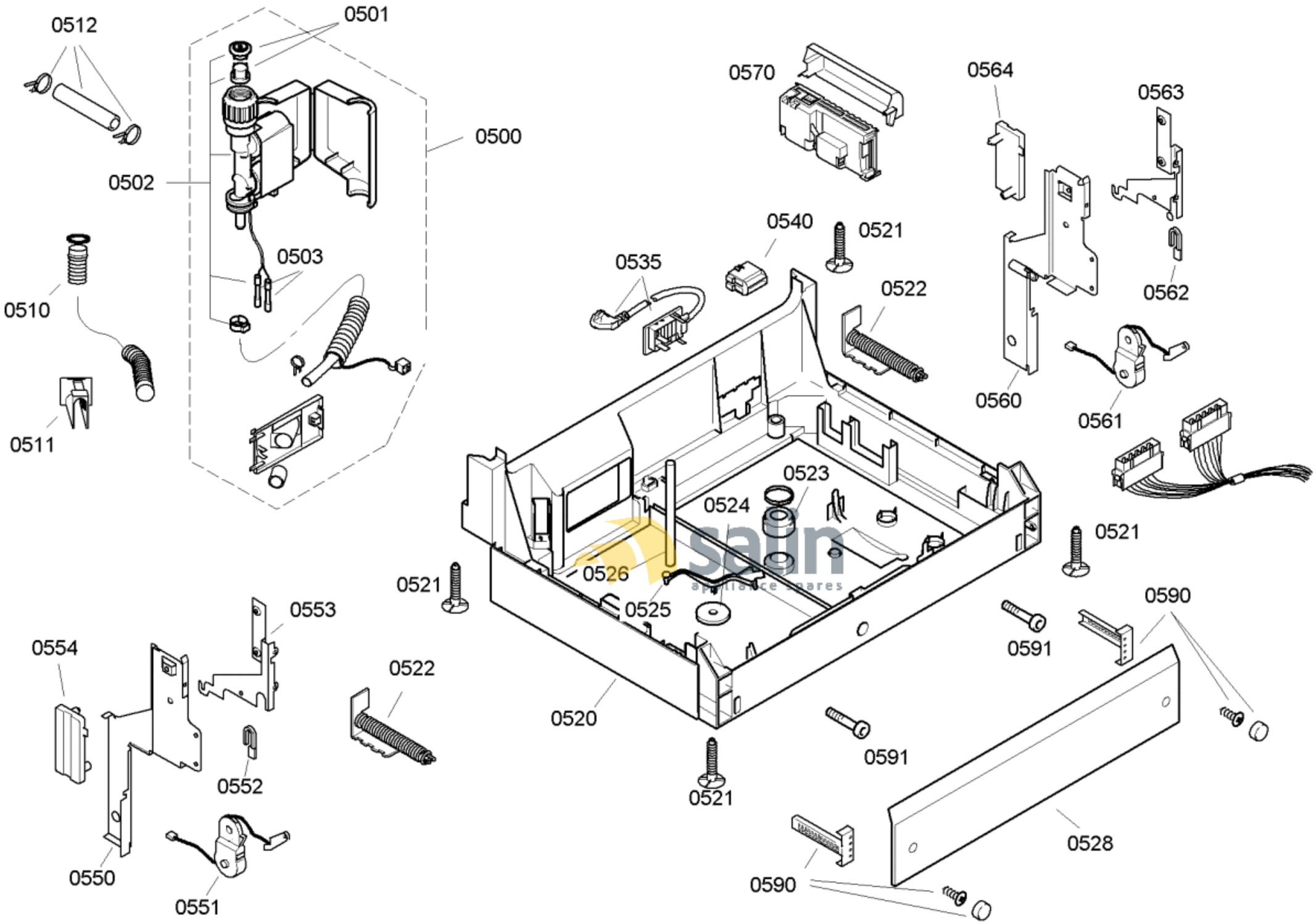

58300000118185 aet 000 a 5/6

FAMILY : SGU59T75EU

MODEL NO: SGU59T75EU/07

Check Position No/Part No or Replacement No

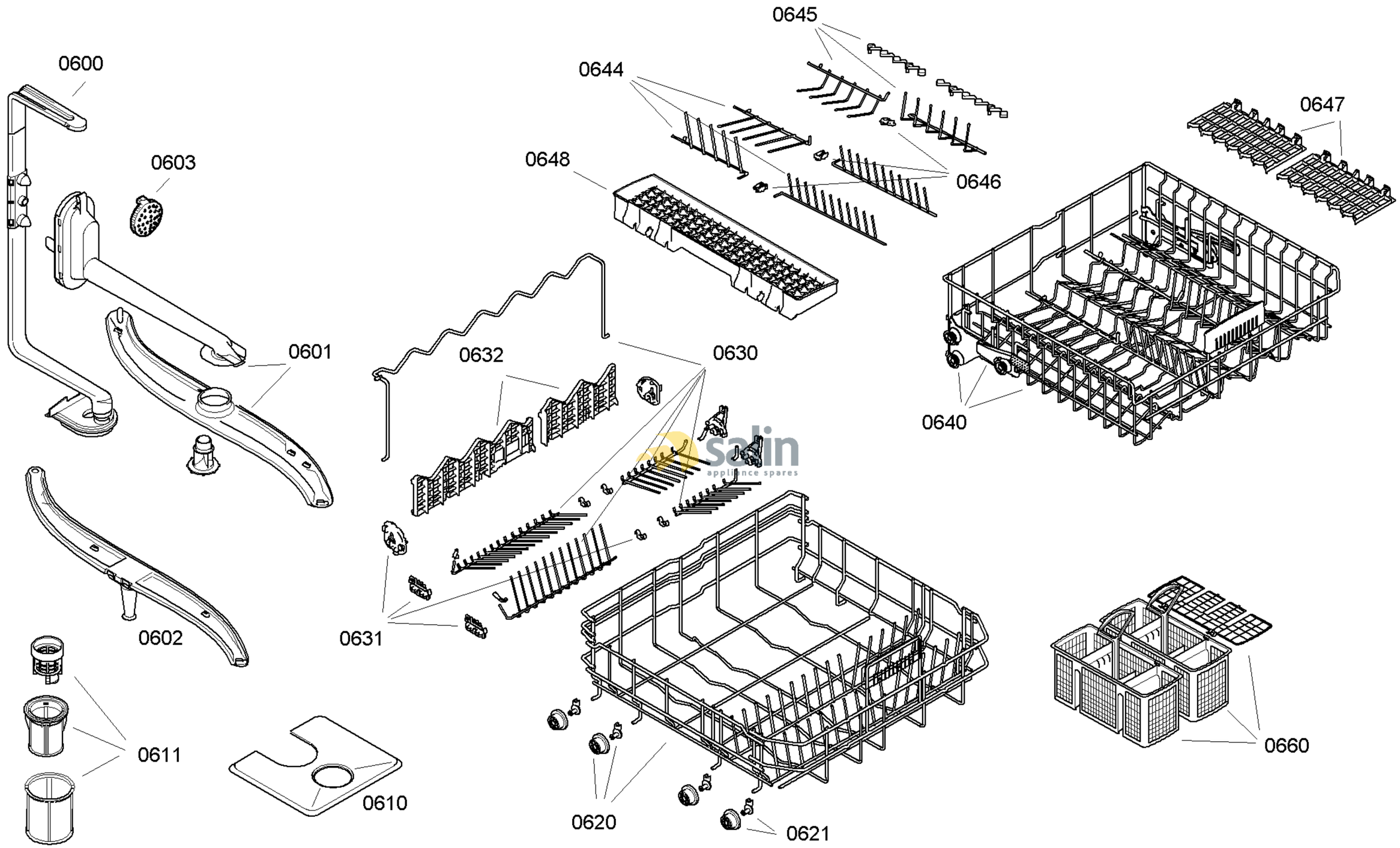

58300000118185 aet 000 a 6/6

FAMILY : SGU59T75EU
MODEL NO: SGU59T75EU/07
Check Position No/Part No or Replacement No