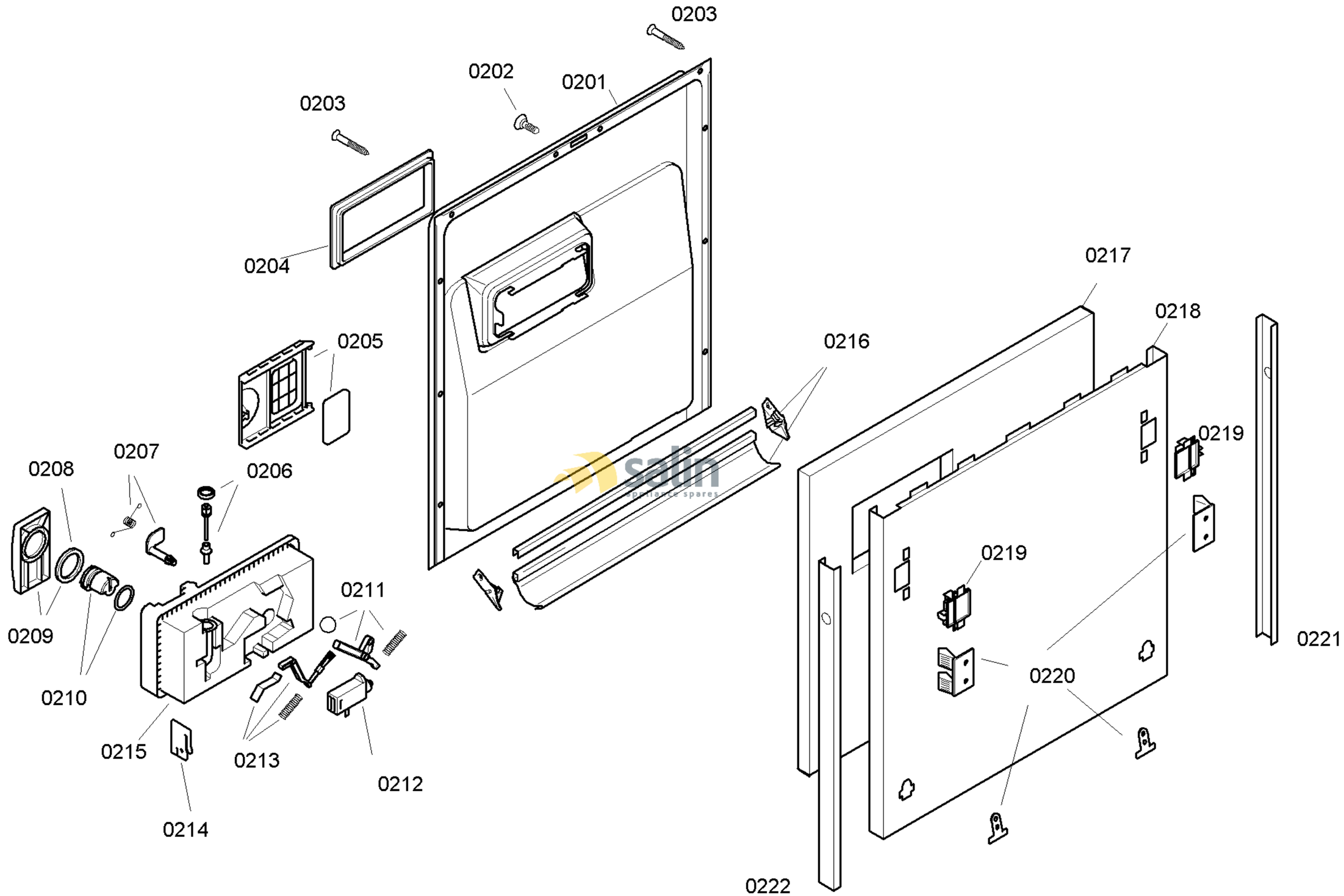


58300000109007 aet 000 b 2/6

FAMILY : SGI45M02EU
MODEL NO: SGI45M02EU/67
Check Position No/Part No or Replacement No

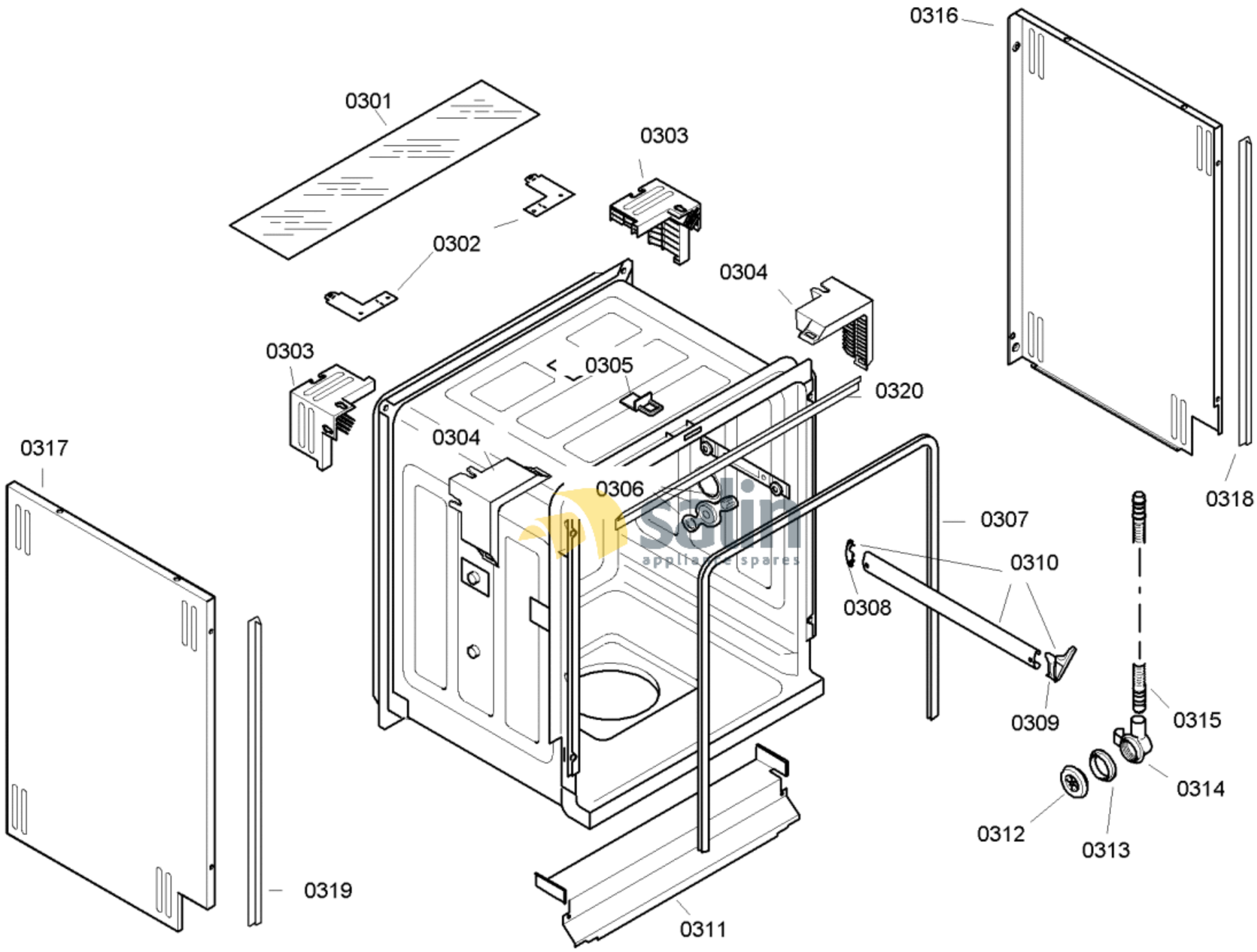


58300000109007 aet 000 b 3/6

FAMILY : SGI45M02EU

MODEL NO: SGI45M02EU/67

Check Position No/Part No or Replacement No

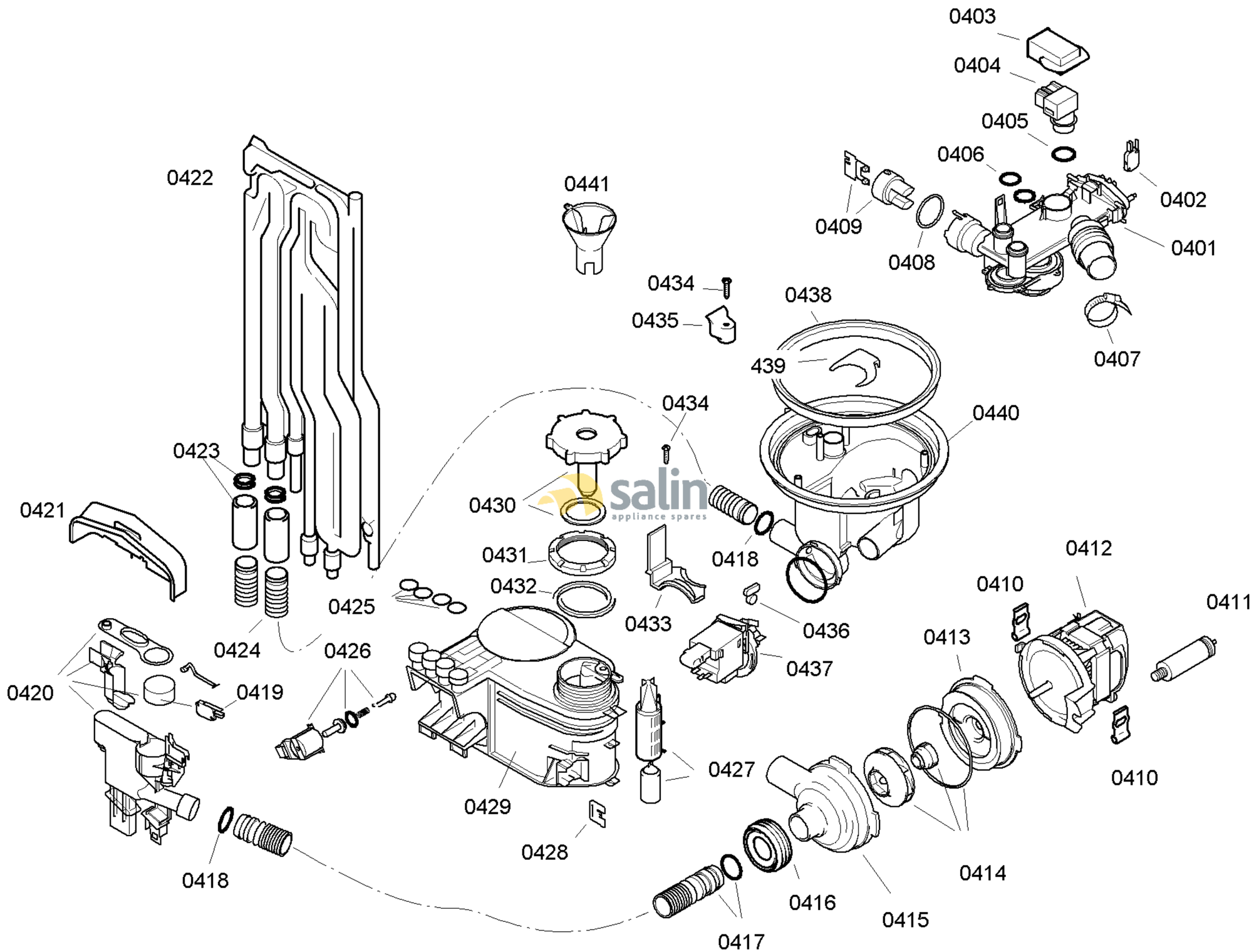


58300000109007 aet 000 b 4/6

FAMILY : SGI45M02EU
MODEL NO: SGI45M02EU/67
Check Position No/Part No or Replacement No

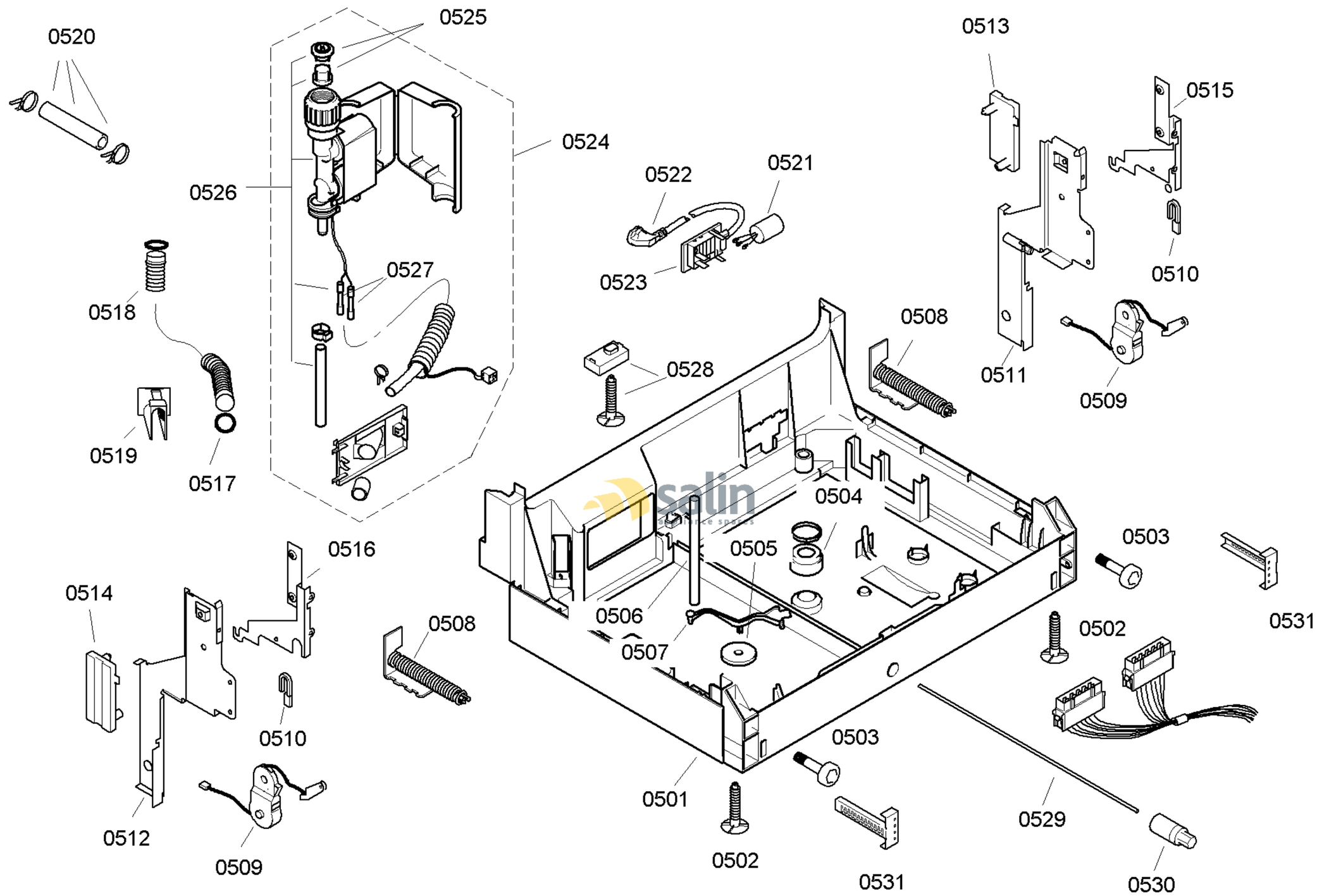


58300000109007 aet 000 b 5/6

FAMILY : SGI45M02EU
MODEL NO: SGI45M02EU/67
Check Position No/Part No or Replacement No