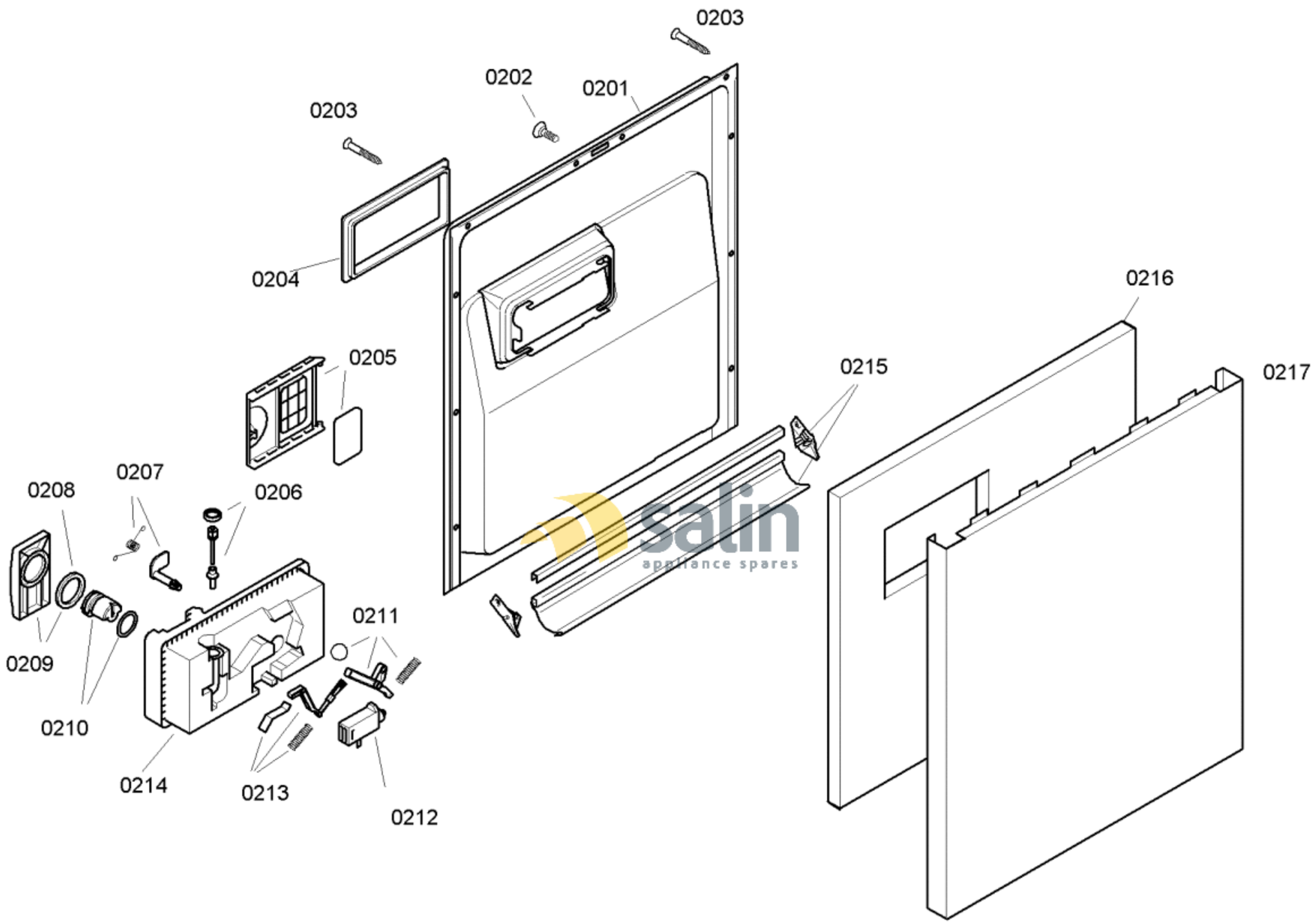

58300000108190 aet 000 b 2/6

FAMILY : SGS55E08EU

MODEL NO: SGS55E08EU/74

Check Position No/Part No or Replacement No

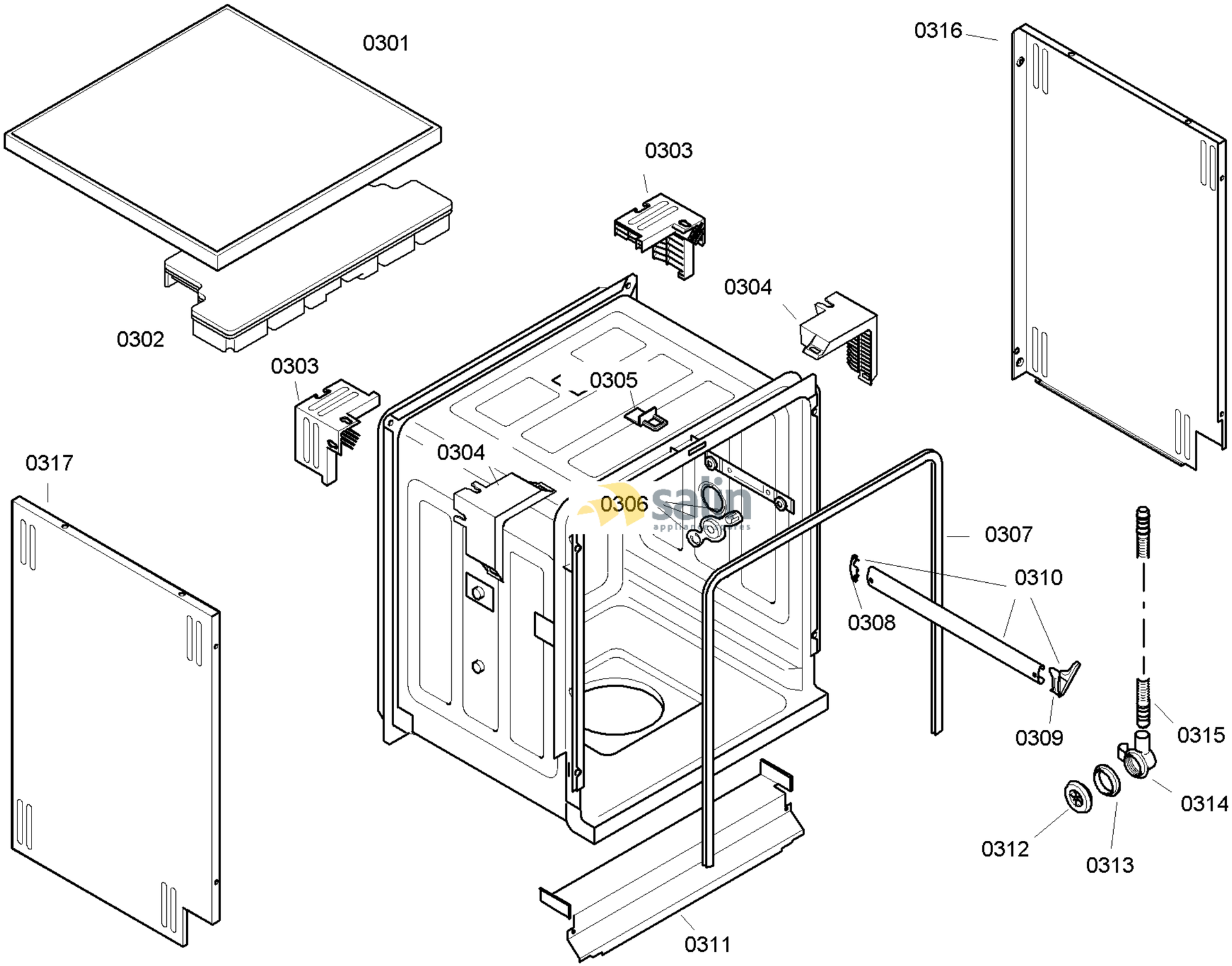

58300000108190 aet 000 b 3/6

FAMILY : SGS55E08EU
MODEL NO: SGS55E08EU/74
Check Position No/Part No or Replacement No

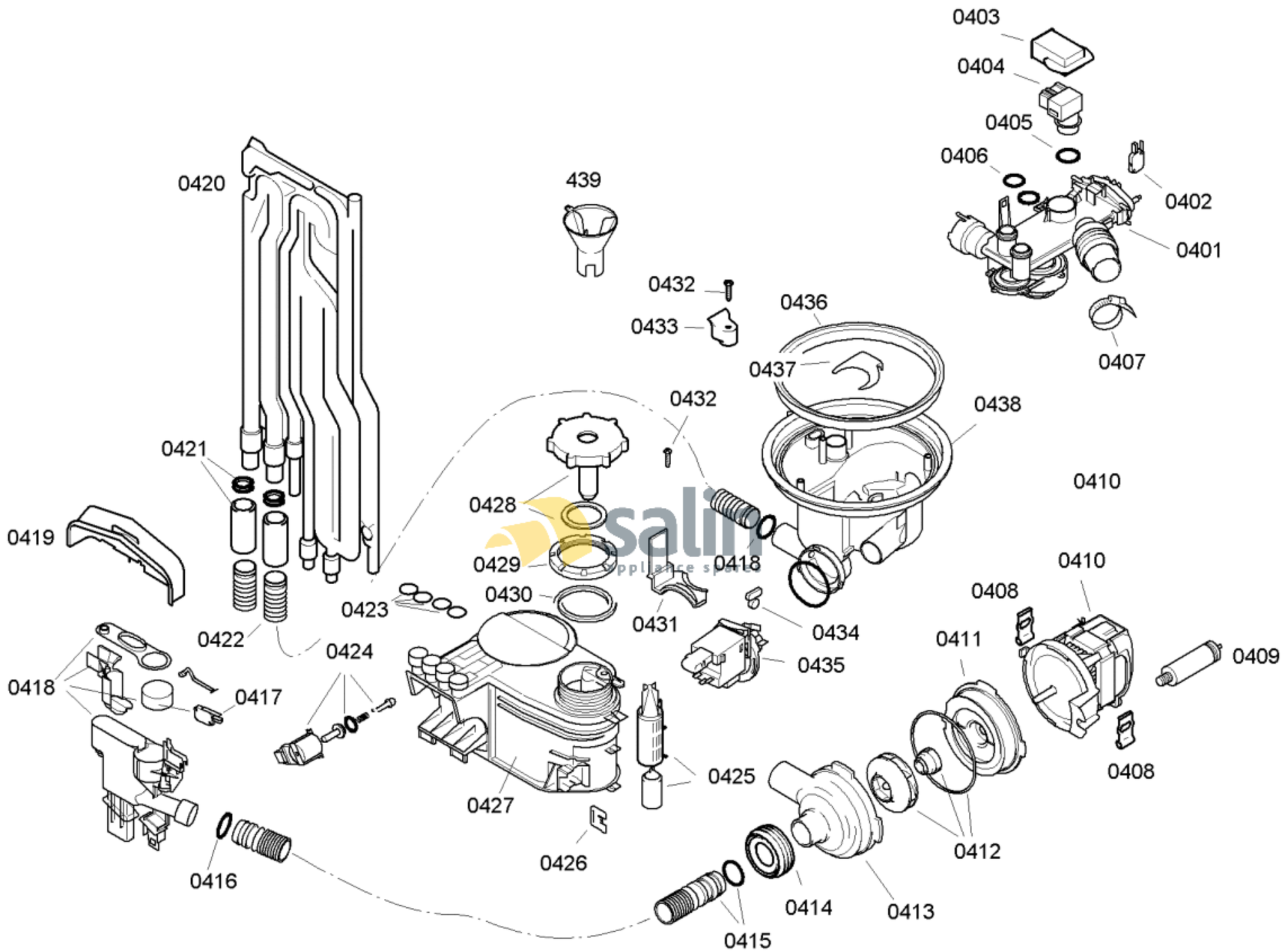

58300000108190 aet 000 b 4/6

FAMILY : SGS55E08EU

MODEL NO: SGS55E08EU/74

Check Position No/Part No or Replacement No

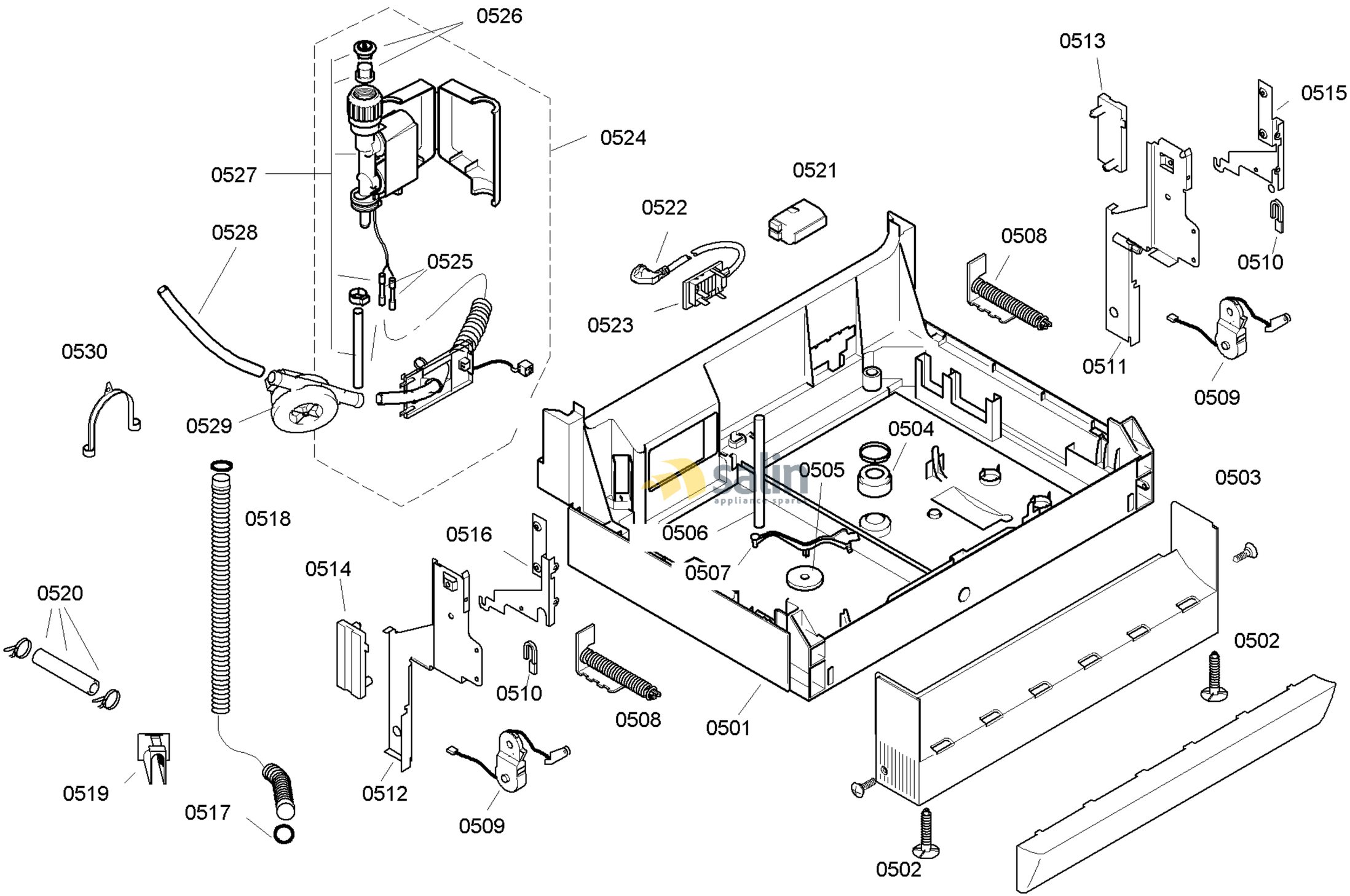

58300000108190 aet 000 b 5/6

FAMILY : SGS55E08EU
MODEL NO: SGS55E08EU/74
Check Position No/Part No or Replacement No

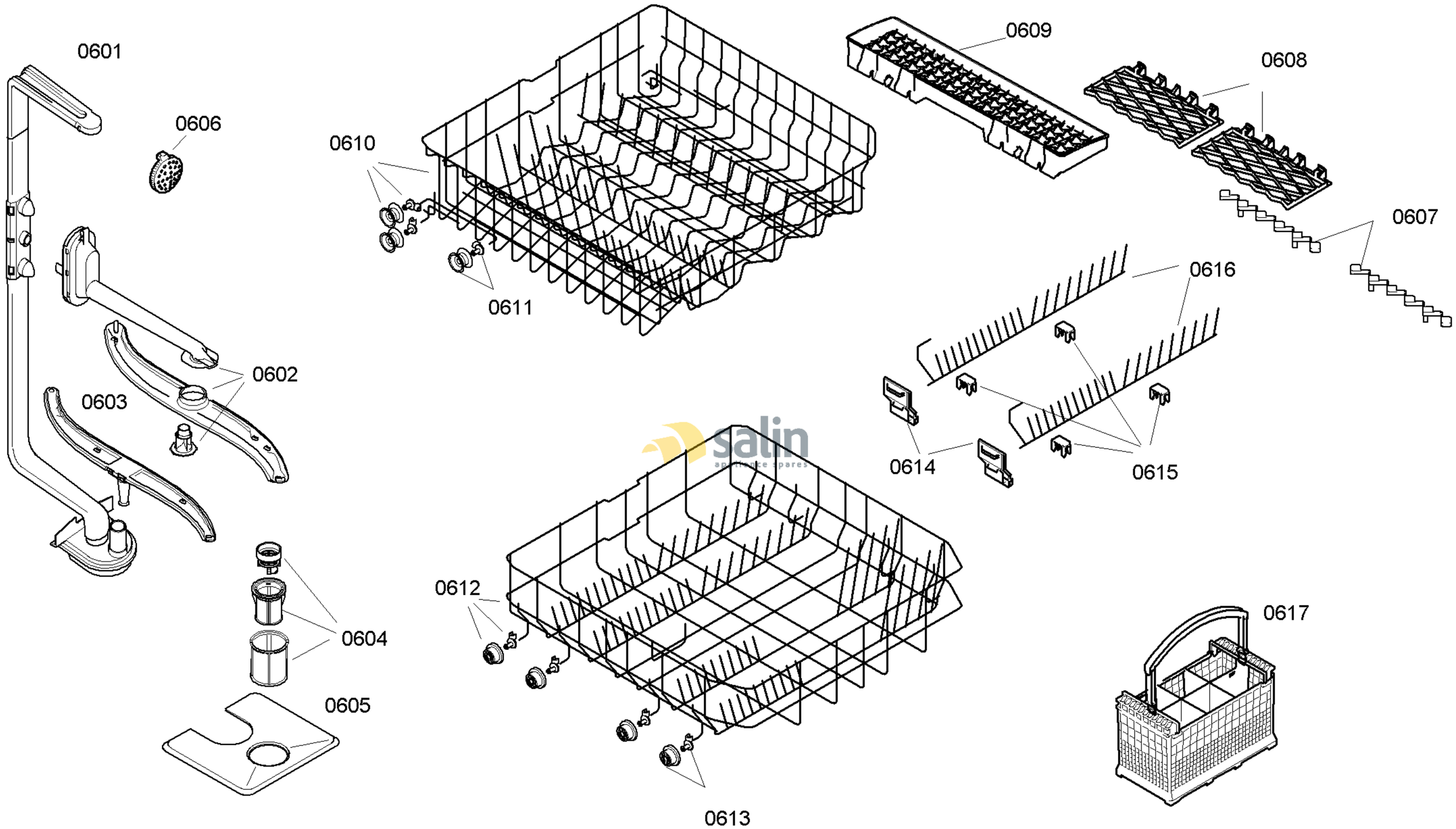

58300000108190 aet 000 b 6/6

FAMILY : SGS55E08EU
MODEL NO: SGS55E08EU/74
Check Position No/Part No or Replacement No