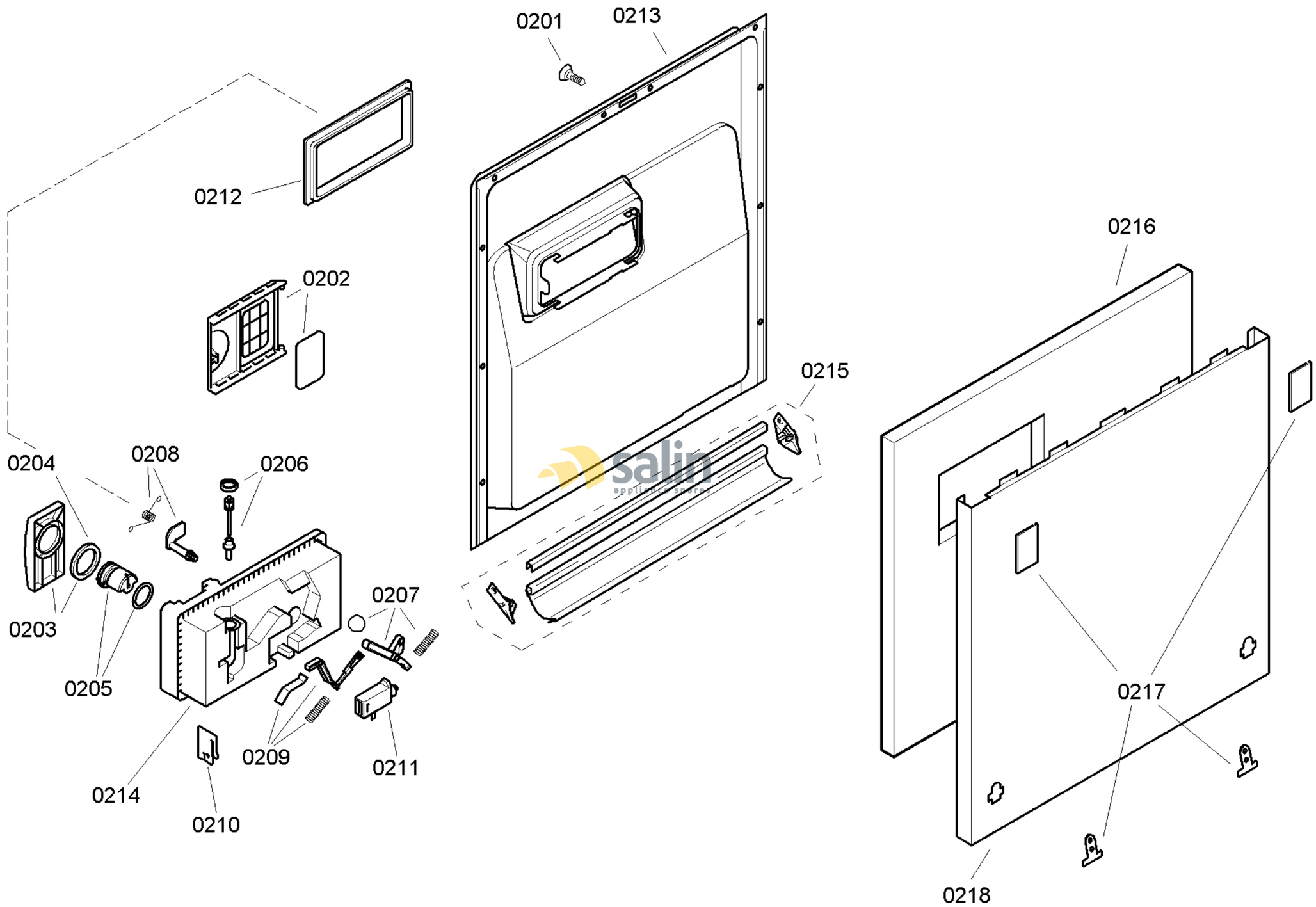

58300000128931 aet 000 b 2/6

FAMILY : SGV43E93EU
MODEL NO: SGV43E93EU/28
Check Position No/Part No or Replacement No

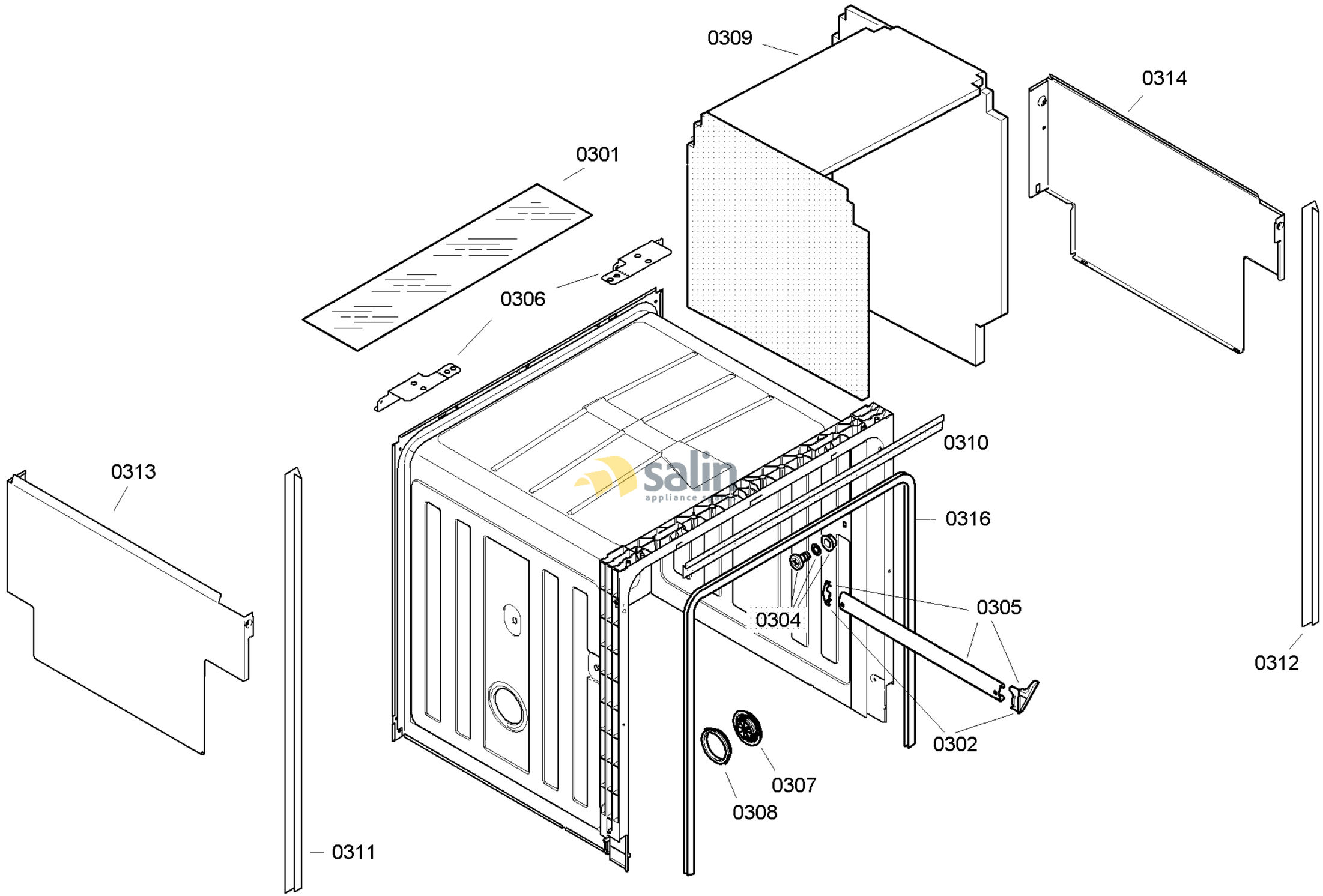

58300000128931 aet 000 b 3/6

FAMILY : SGV43E93EU
MODEL NO: SGV43E93EU/28
Check Position No/Part No or Replacement No

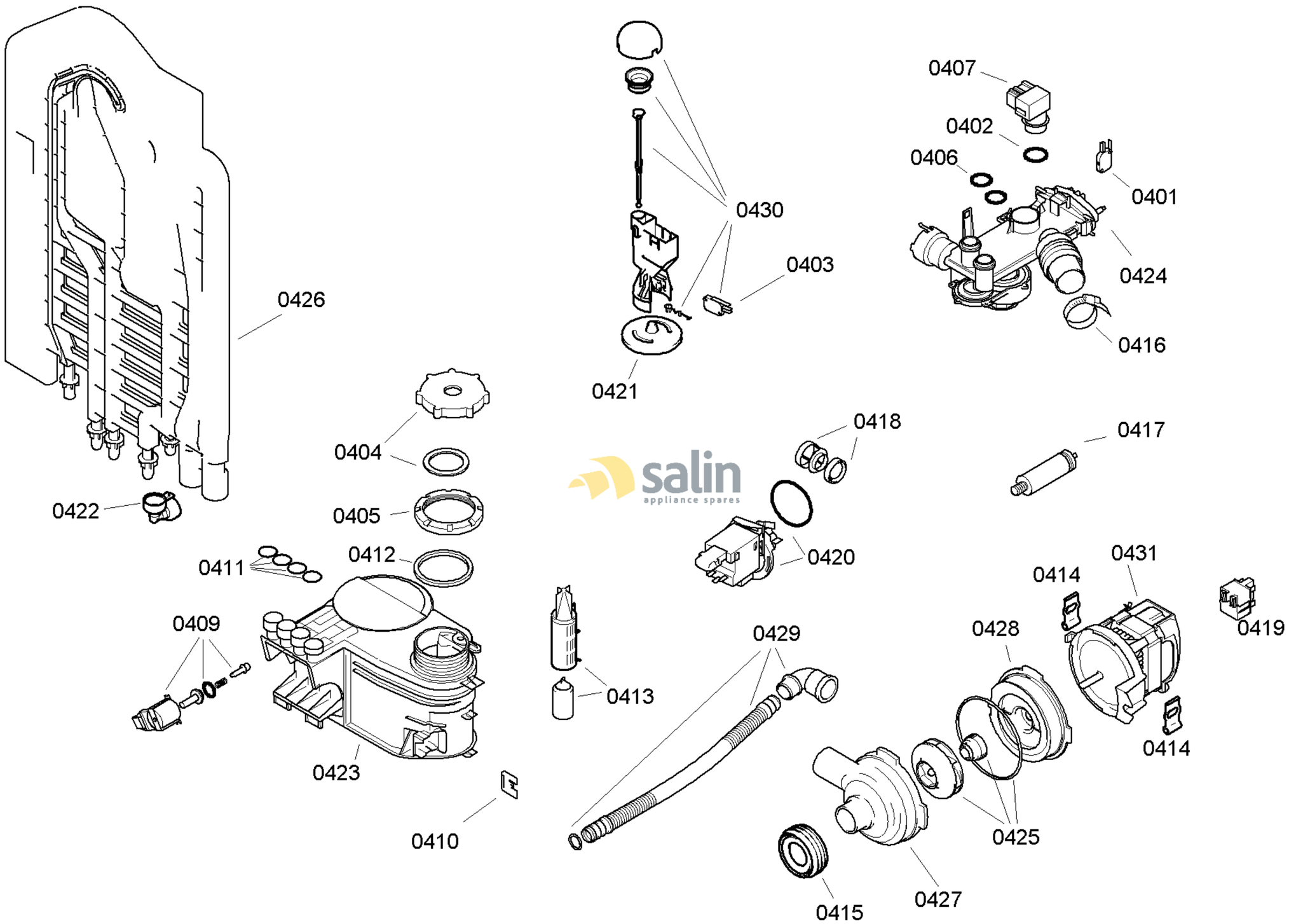

58300000128931 aet 000 b 4/6

FAMILY : SGV43E93EU
MODEL NO: SGV43E93EU/28
Check Position No/Part No or Replacement No

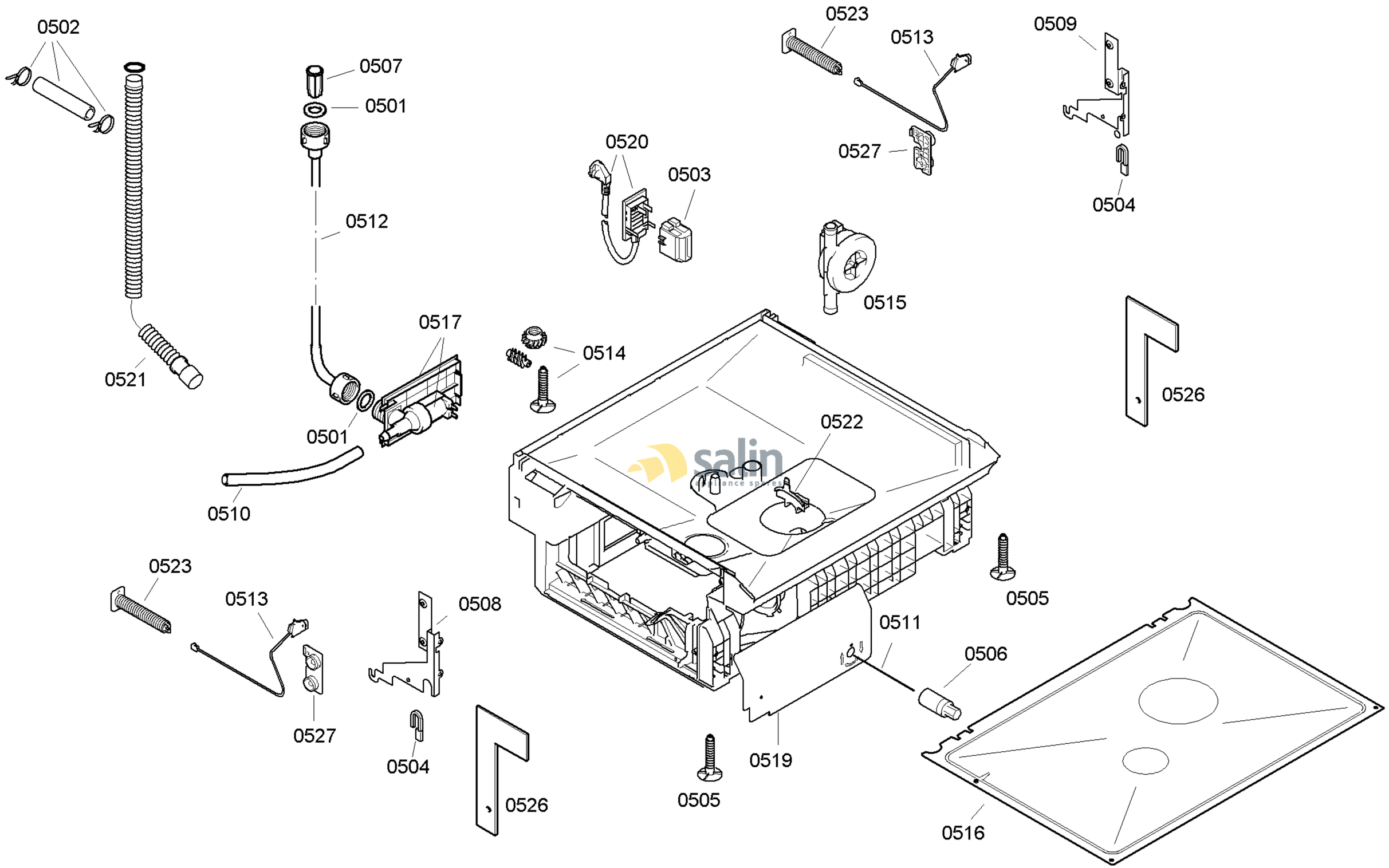

58300000128931 aet 000 b 5/6

FAMILY : SGV43E93EU
MODEL NO: SGV43E93EU/28
Check Position No/Part No or Replacement No

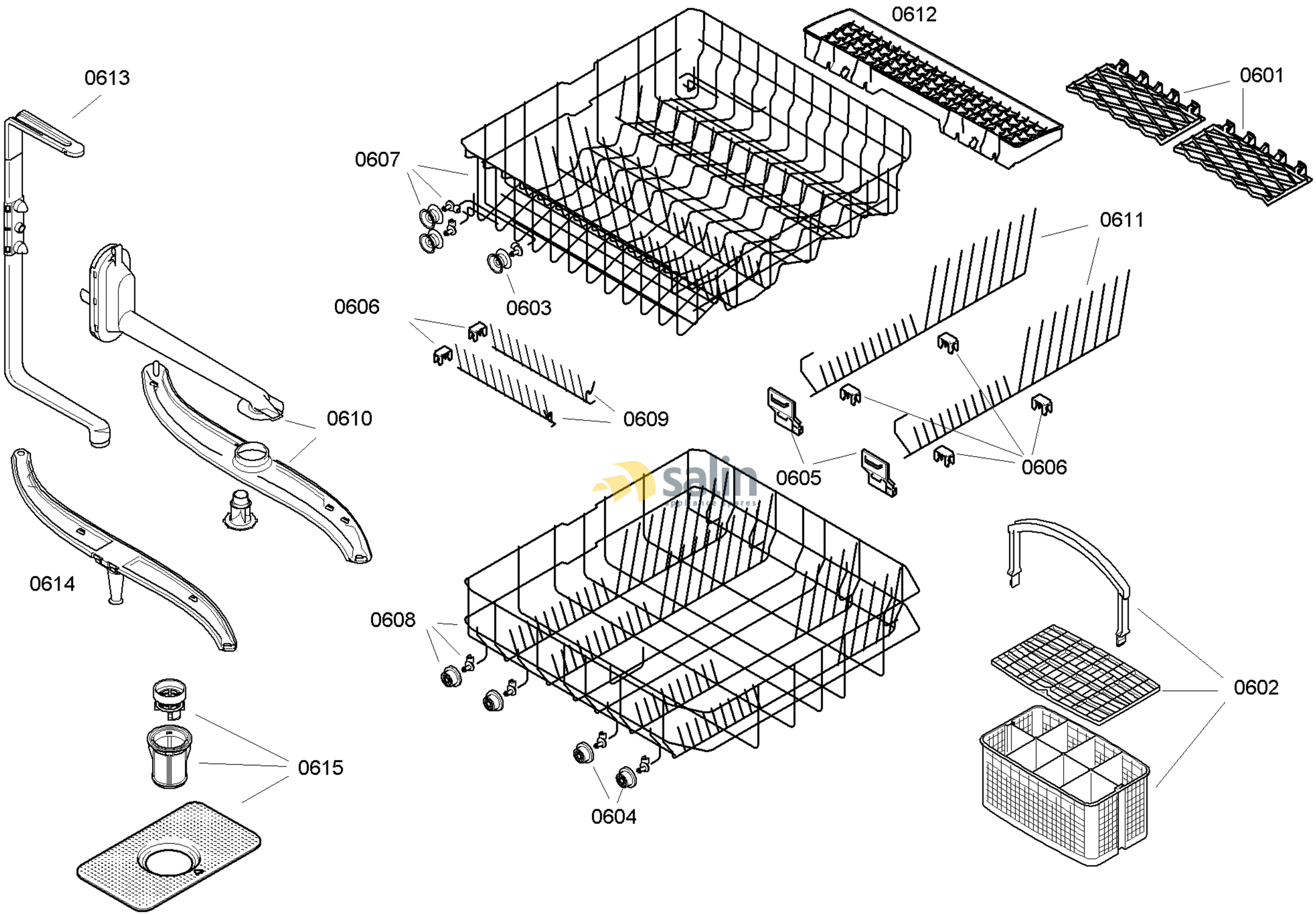

58300000128931 aet 000 b 6/6

FAMILY : SGV43E93EU
MODEL NO: SGV43E93EU/28
Check Position No/Part No or Replacement No