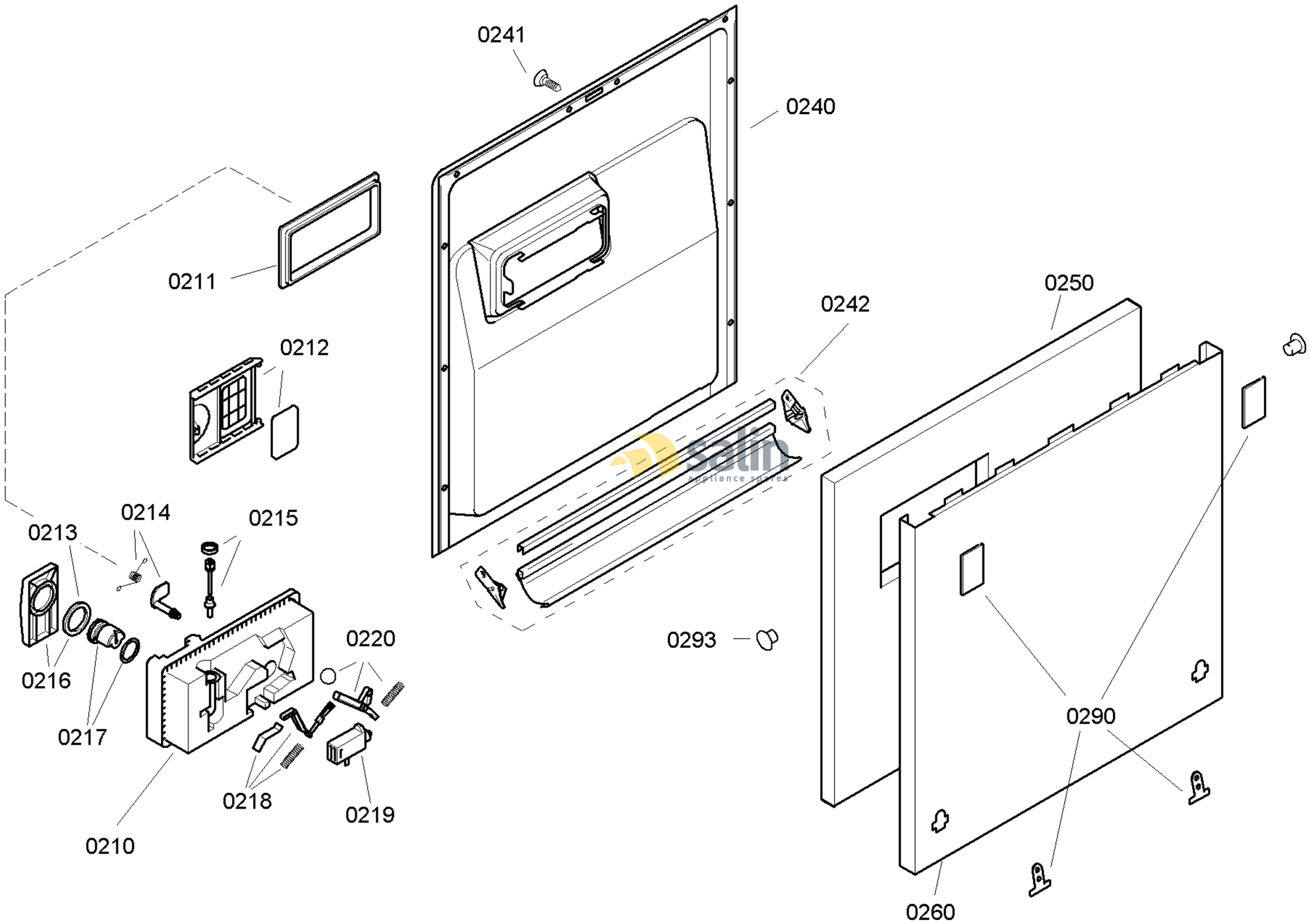

58300000131615 aet 000 a 2/6

FAMILY : SHI45M65EU
MODEL NO: SHI45M65EU/82
Check Position No/Part No or Replacement No

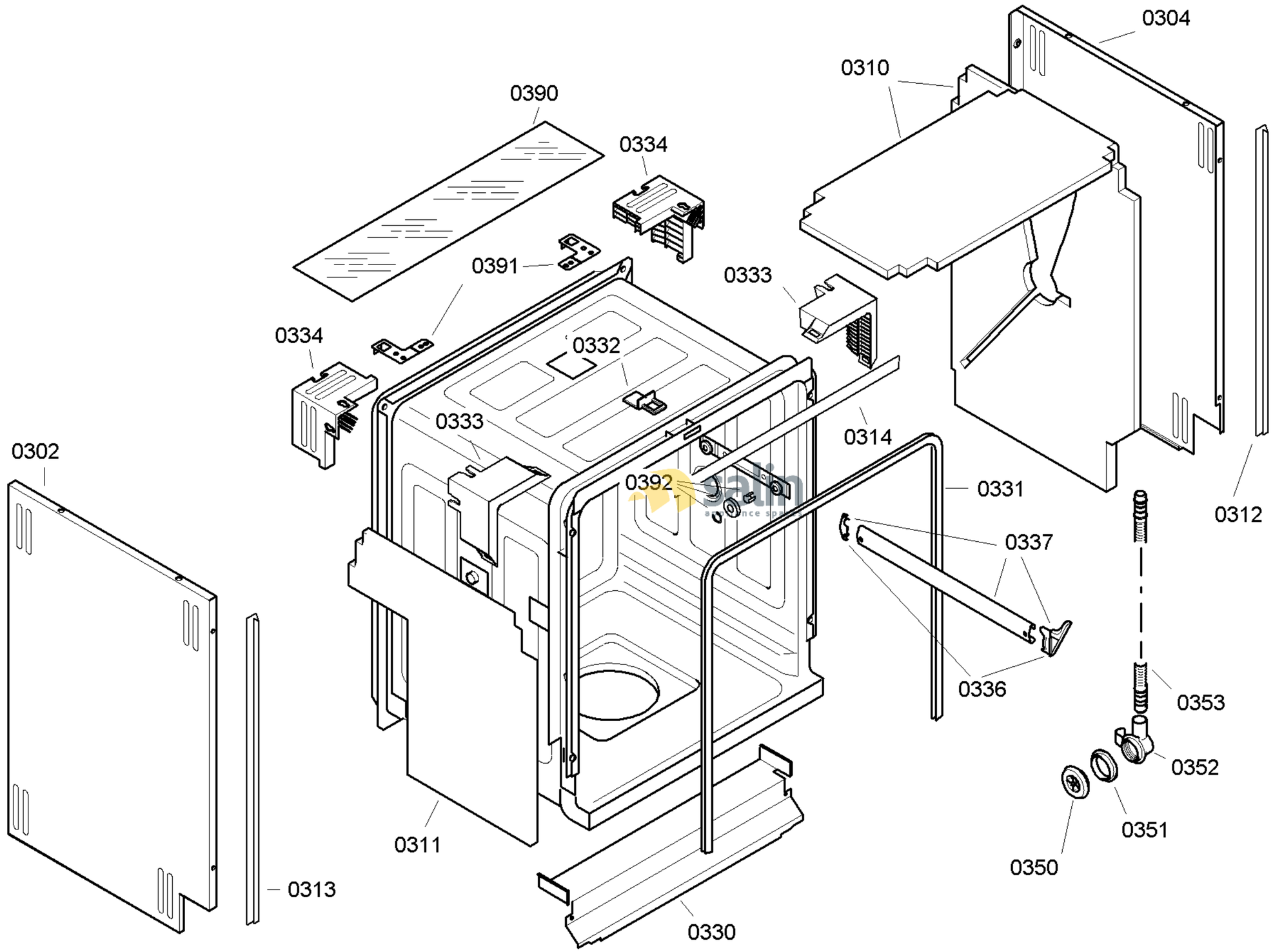

58300000131615 aet 000 a 3/6

FAMILY : SHI45M65EU
MODEL NO: SHI45M65EU/82
Check Position No/Part No or Replacement No

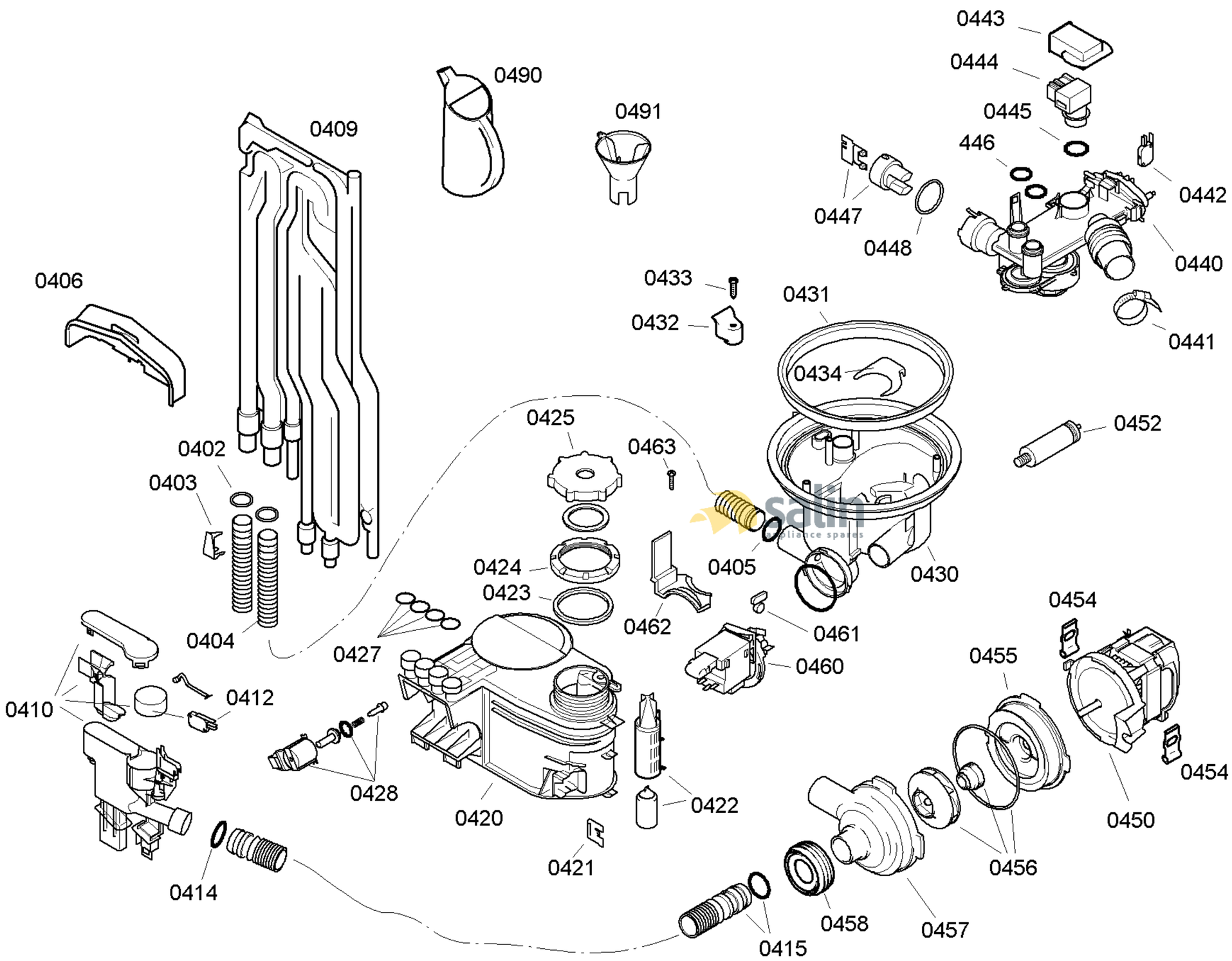

58300000131615 aet 000 a 4/6

FAMILY : SHI45M65EU
MODEL NO: SHI45M65EU/82
Check Position No/Part No or Replacement No

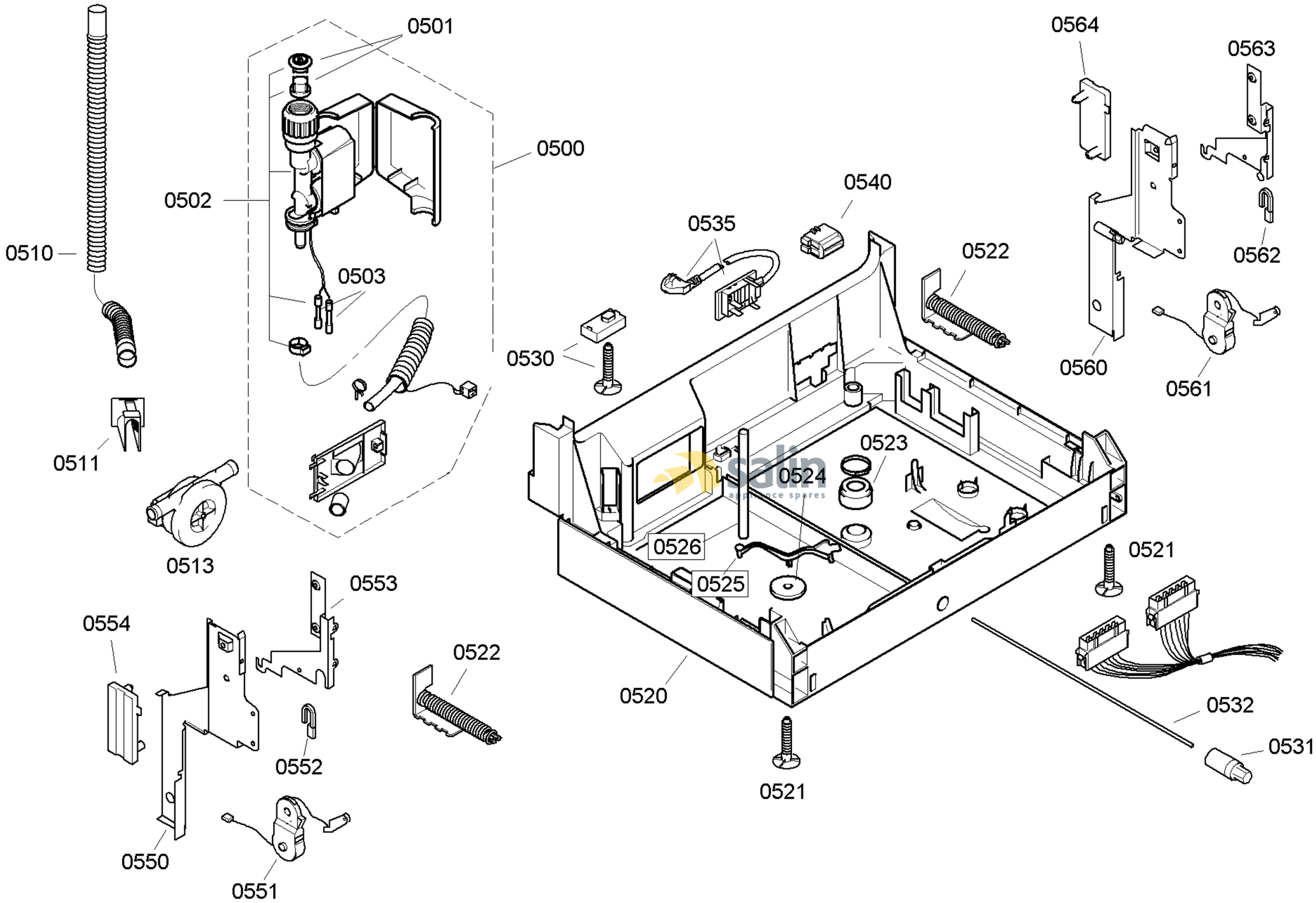

58300000131615 aet 000 a 5/6

FAMILY : SHI45M65EU
MODEL NO: SHI45M65EU/82
Check Position No/Part No or Replacement No

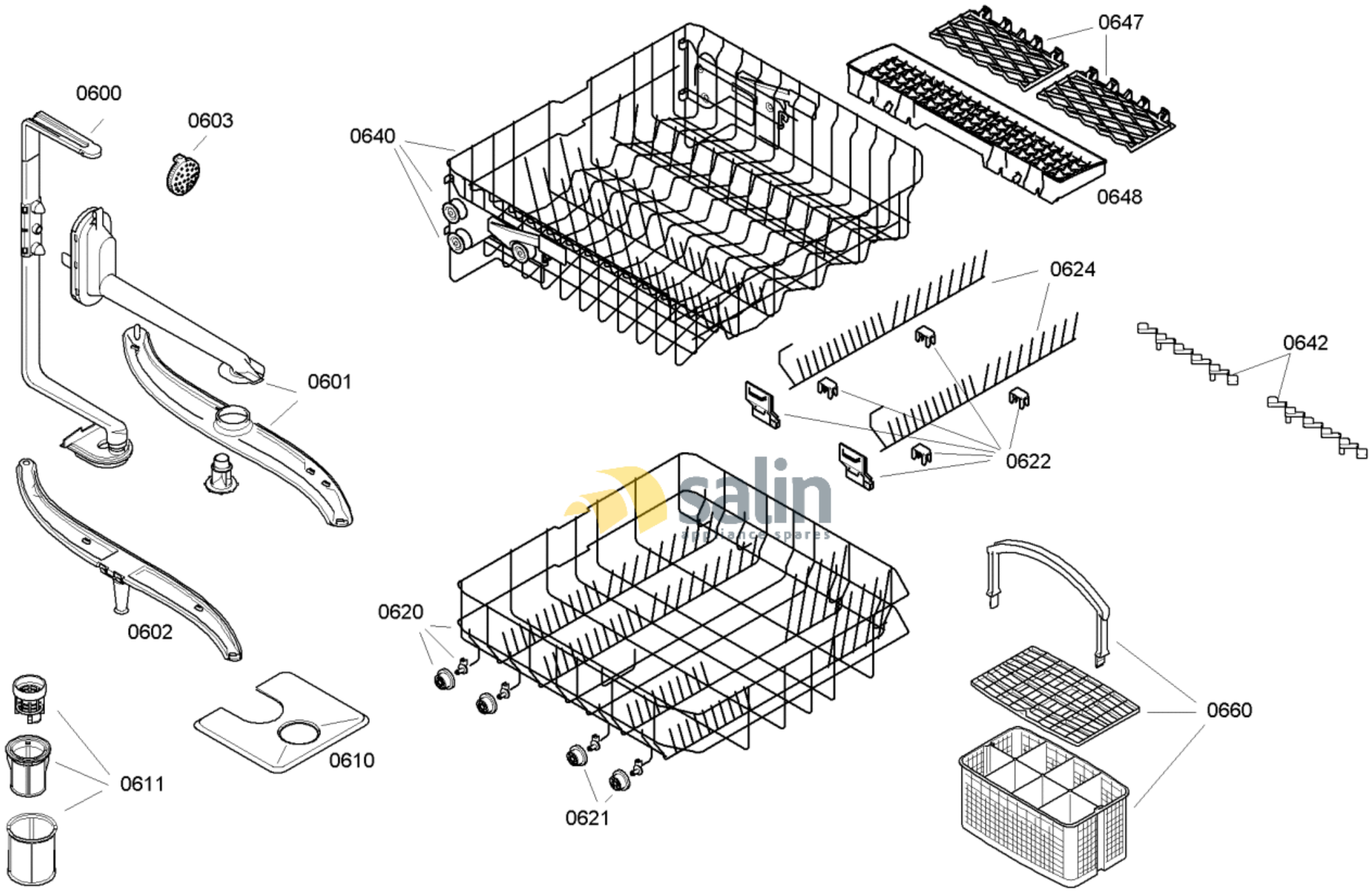

58300000131615 aet 000 a 6/6

FAMILY : SHI45M65EU

MODEL NO: SHI45M65EU/82

Check Position No/Part No or Replacement No