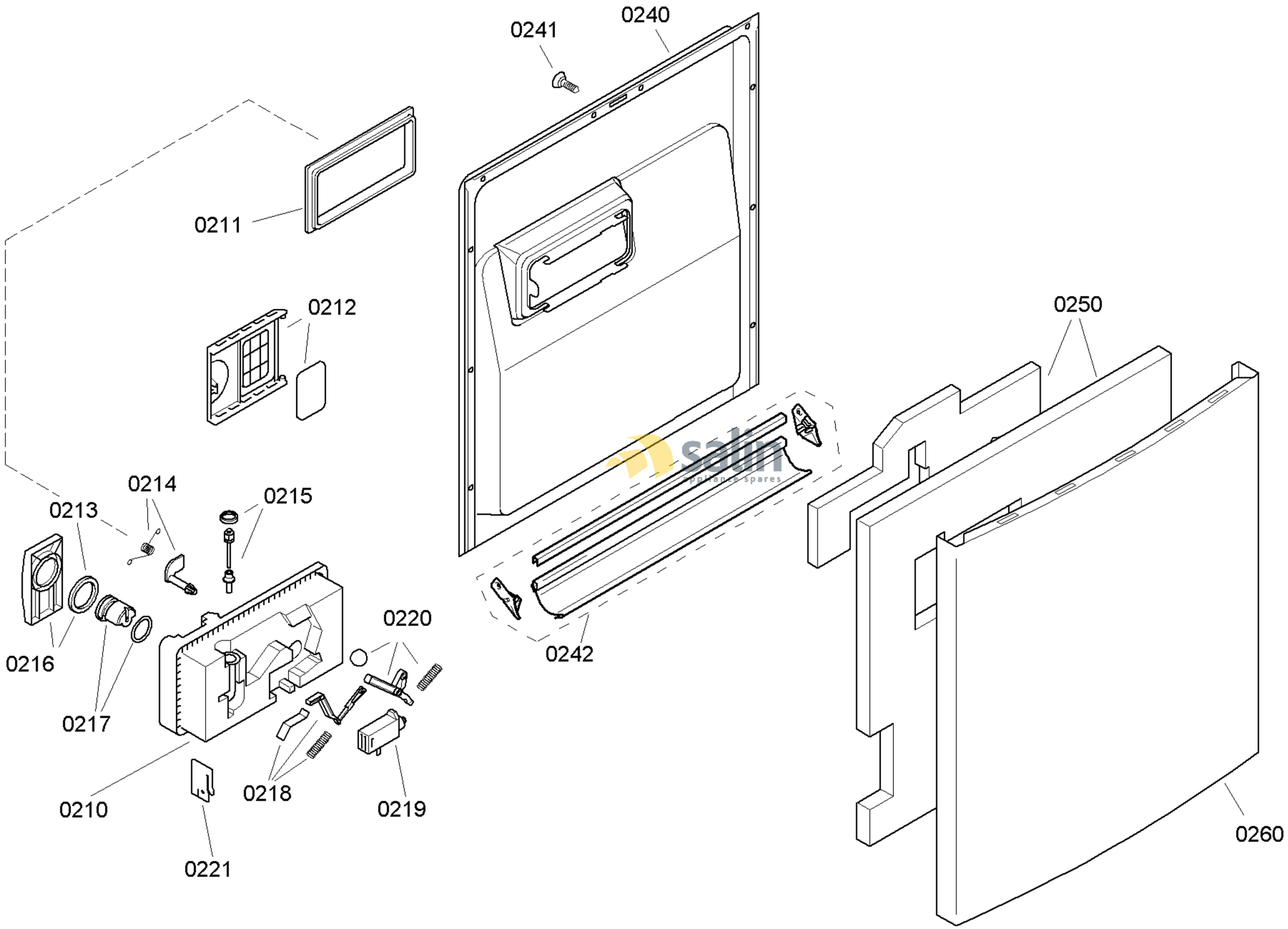

58300000125442 aet 000 a 2/6

FAMILY : SGS69T08EU
MODEL NO: SGS69T08EU/18
Check Position No/Part No or Replacement No

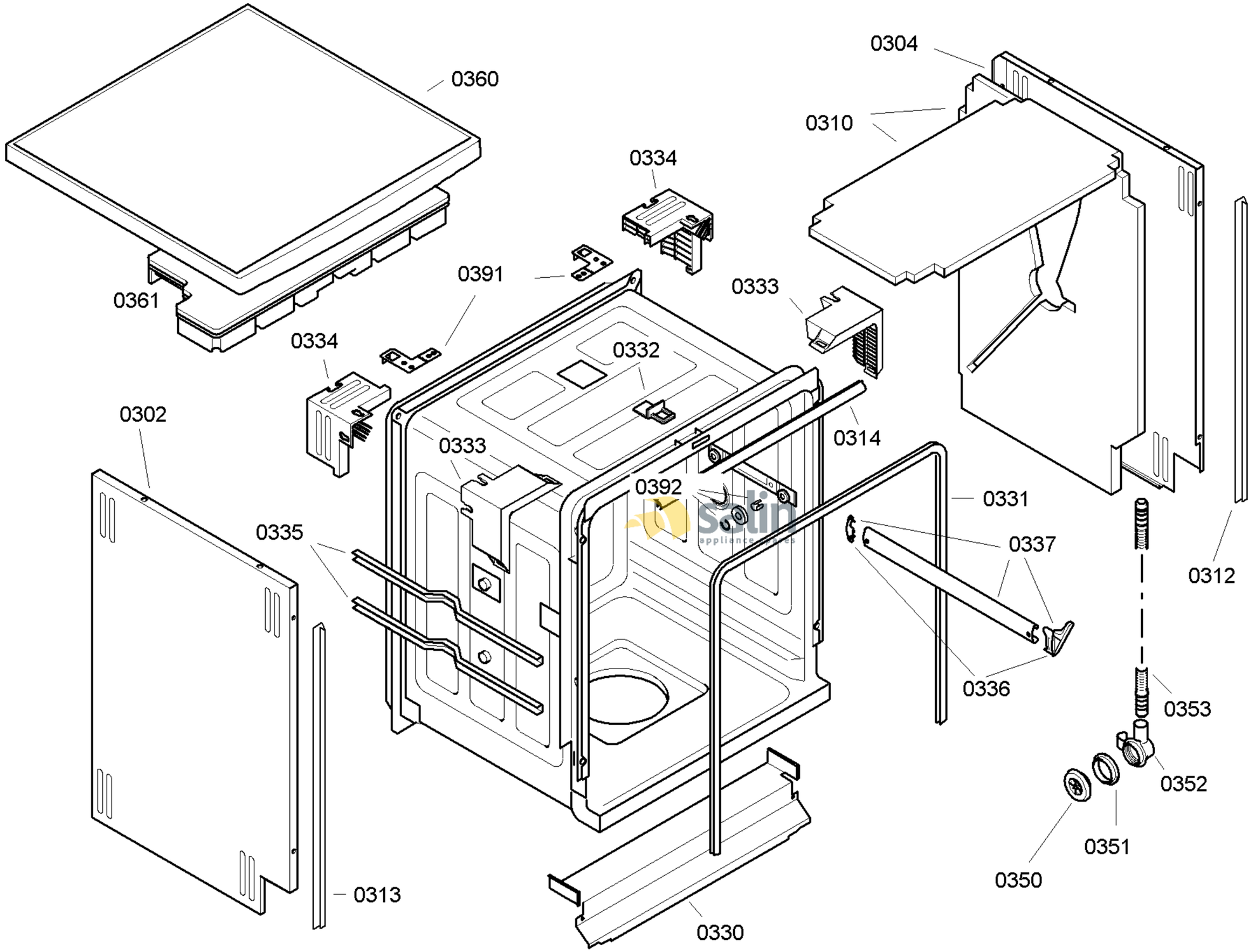

58300000125442 aet 000 a 3/6

FAMILY : SGS69T08EU
MODEL NO: SGS69T08EU/18
Check Position No/Part No or Replacement No

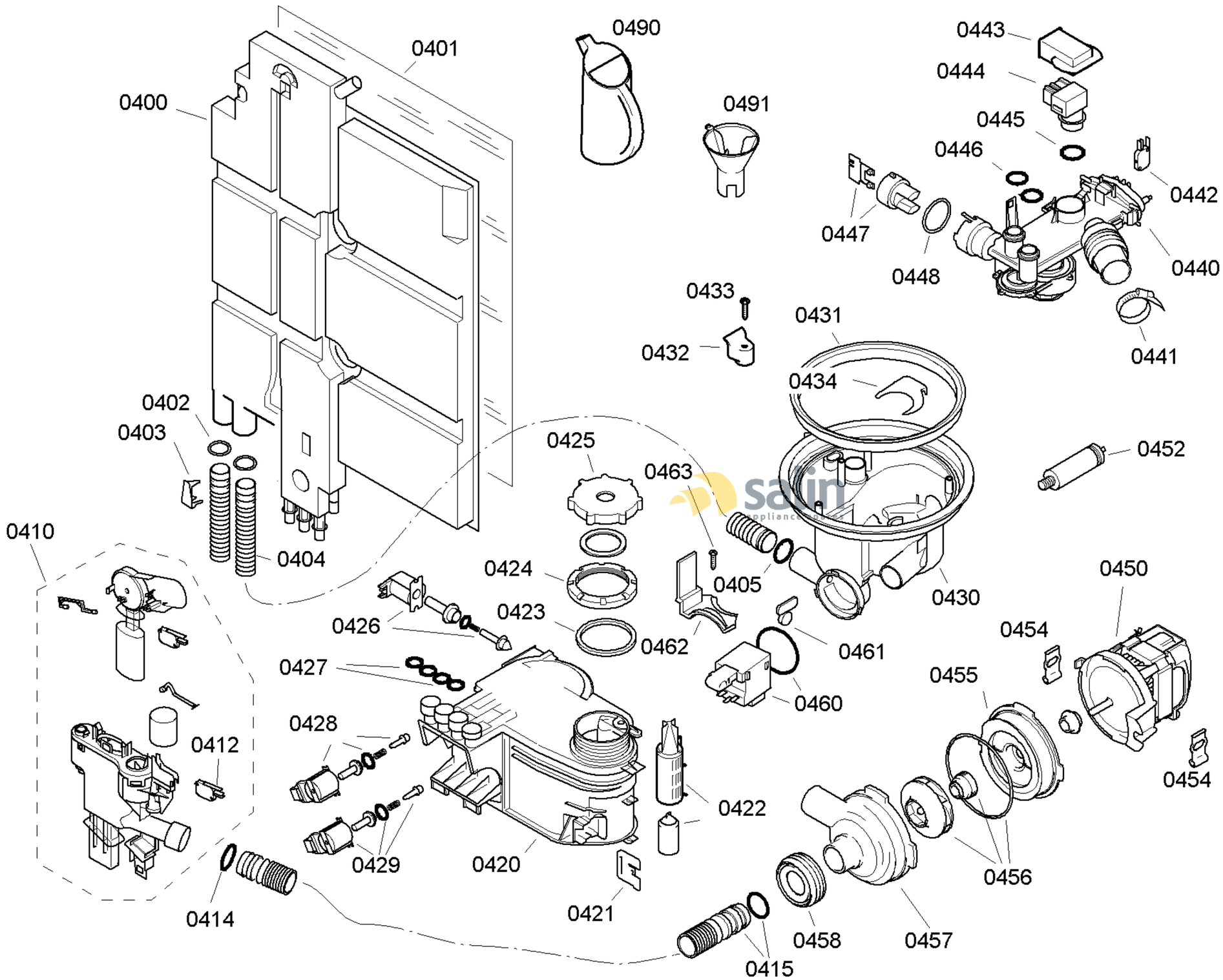

58300000125442 aet 000 a 4/6

FAMILY : SGS69T08EU
MODEL NO: SGS69T08EU/18
Check Position No/Part No or Replacement No

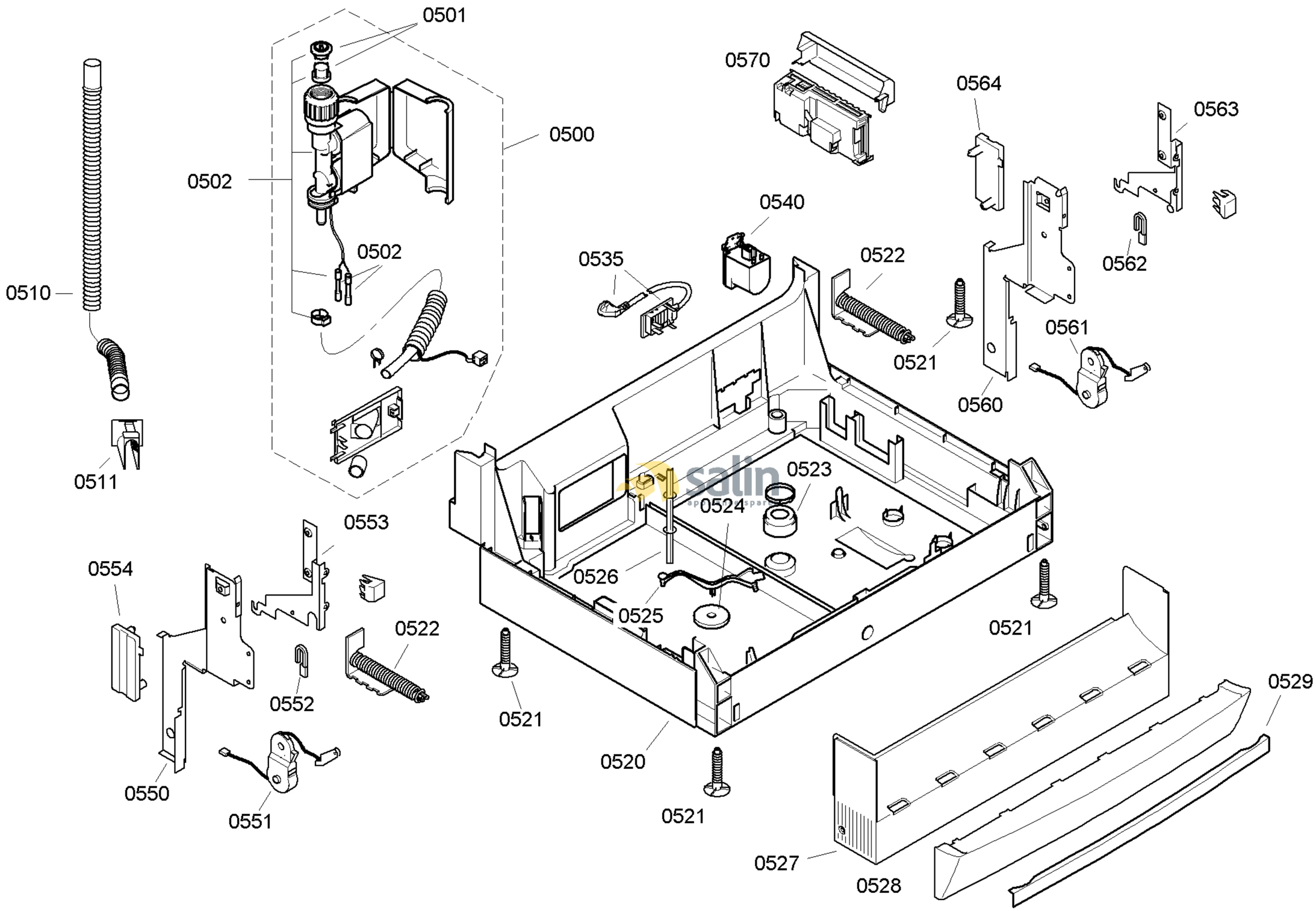

58300000125442 aet 000 a 5/6

FAMILY : SGS69T08EU
MODEL NO: SGS69T08EU/18
Check Position No/Part No or Replacement No

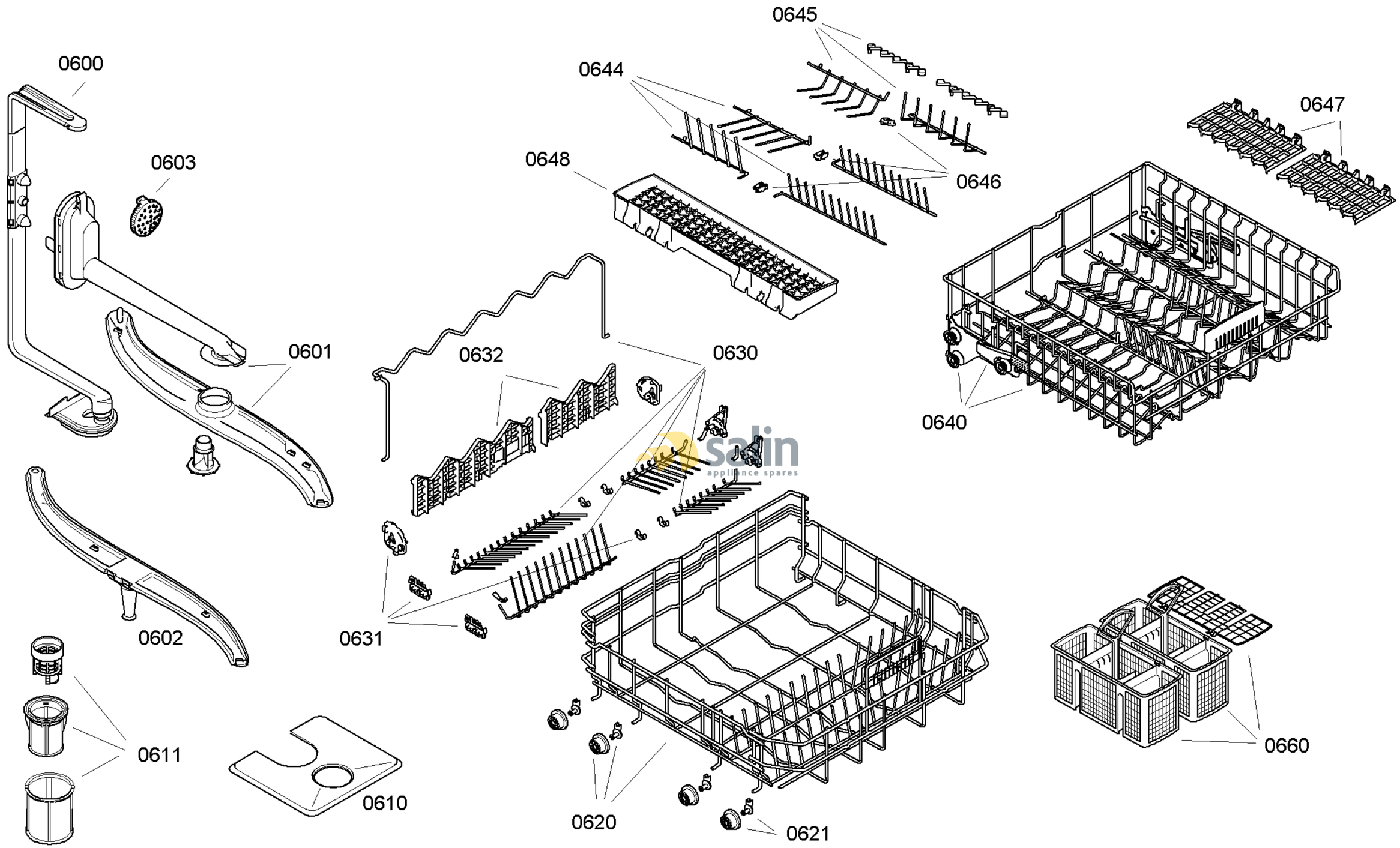

58300000125442 aet 000 a 6/6

FAMILY : SGS69T08EU
MODEL NO: SGS69T08EU/18
Check Position No/Part No or Replacement No