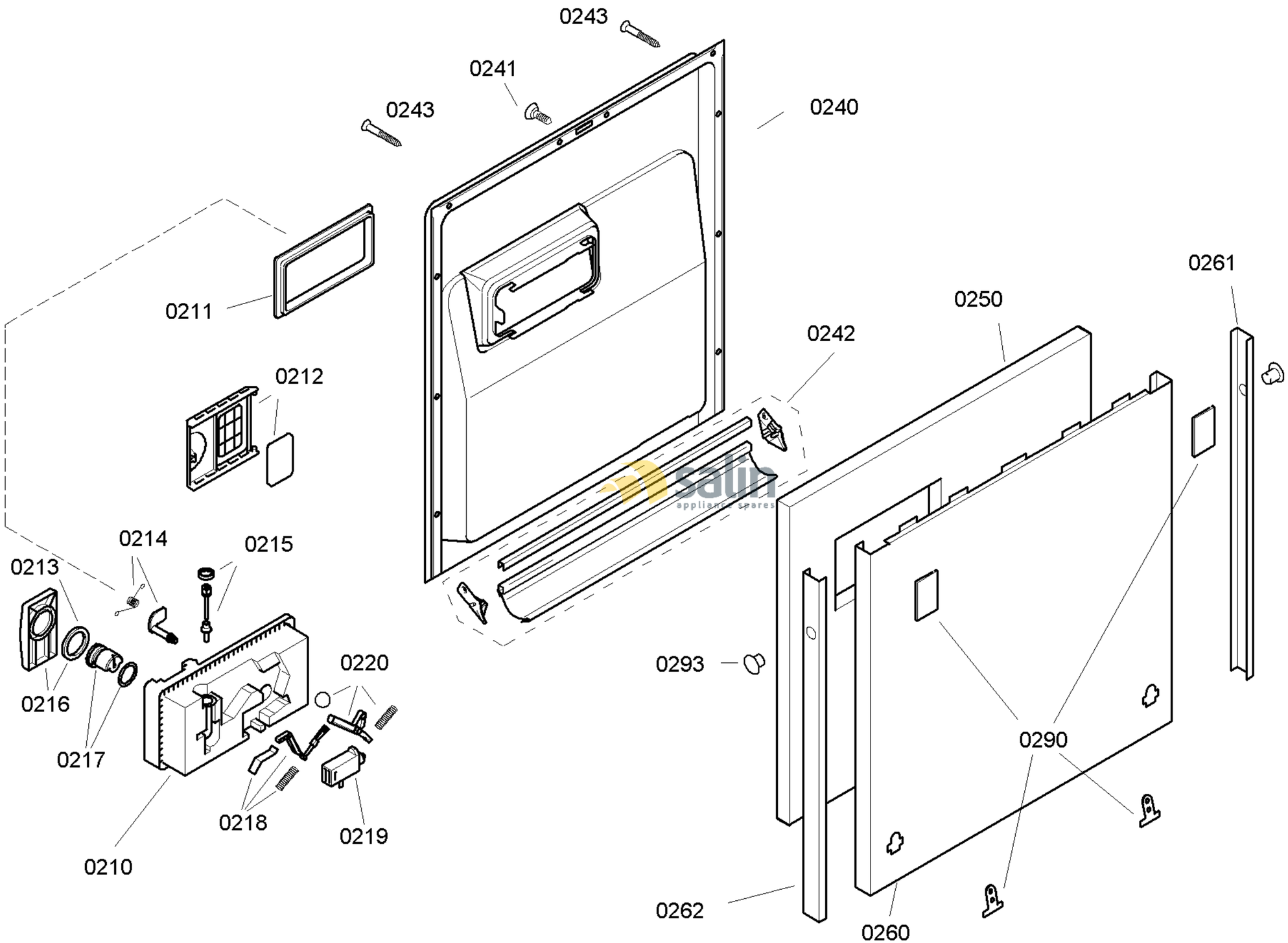

58300000114223 aet 000 c 2/6

FAMILY : SGV45M53EU
MODEL NO: SGV45M53EU/86
Check Position No/Part No or Replacement No

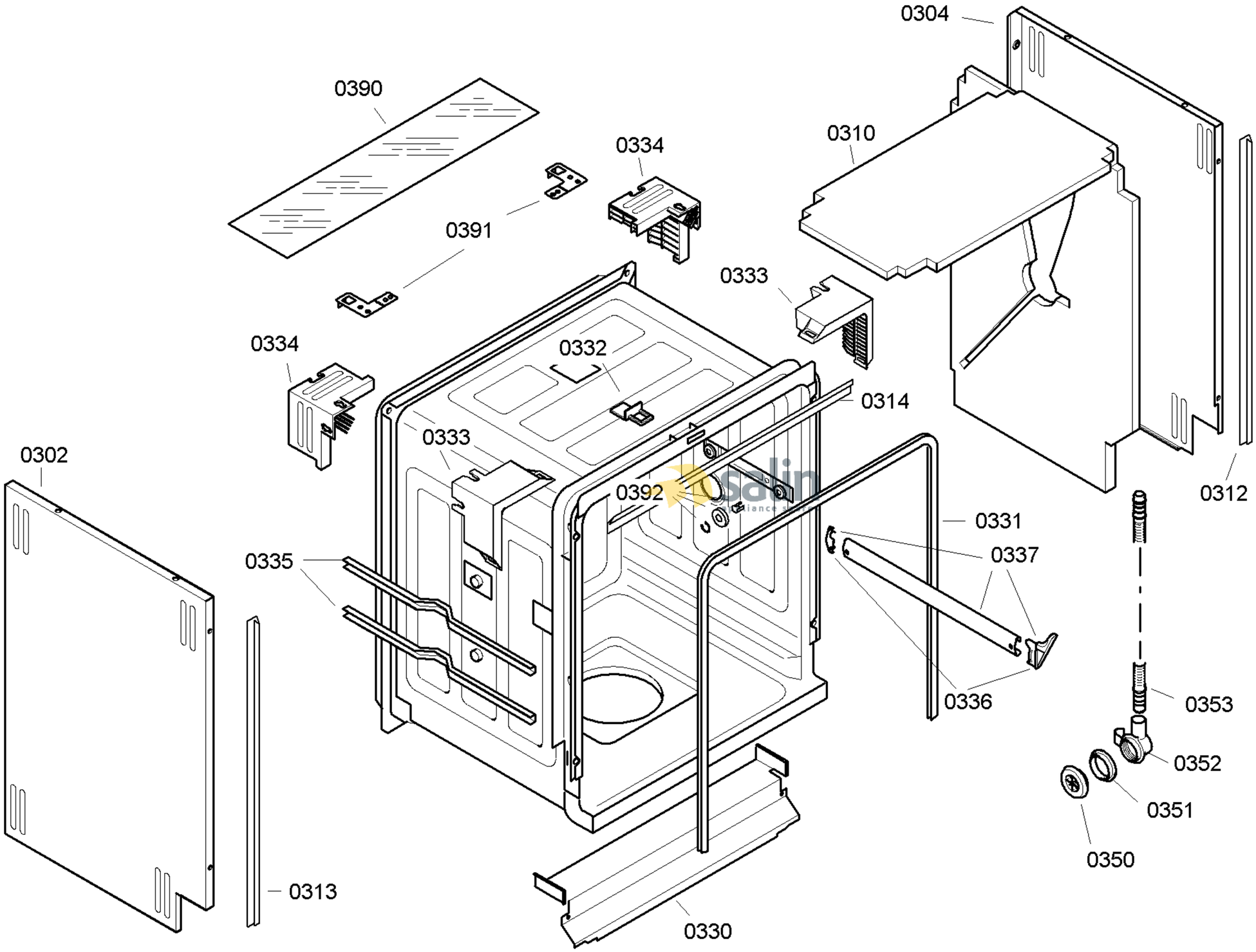

58300000114223 aet 000 c 3/6

FAMILY : SGV45M53EU
MODEL NO: SGV45M53EU/86
Check Position No/Part No or Replacement No

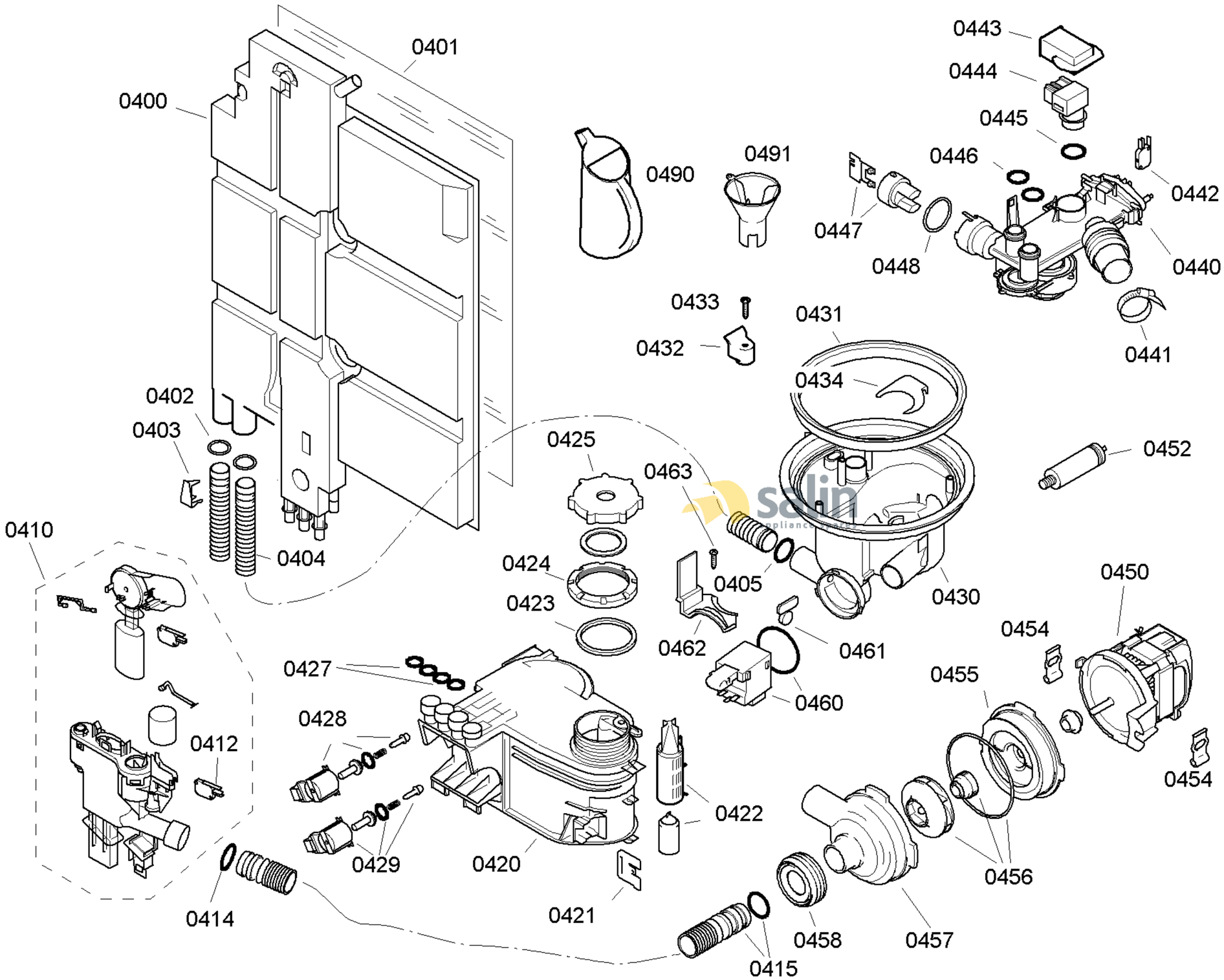

58300000114223 aet 000 c 4/6

FAMILY : SGV45M53EU
MODEL NO: SGV45M53EU/86
Check Position No/Part No or Replacement No

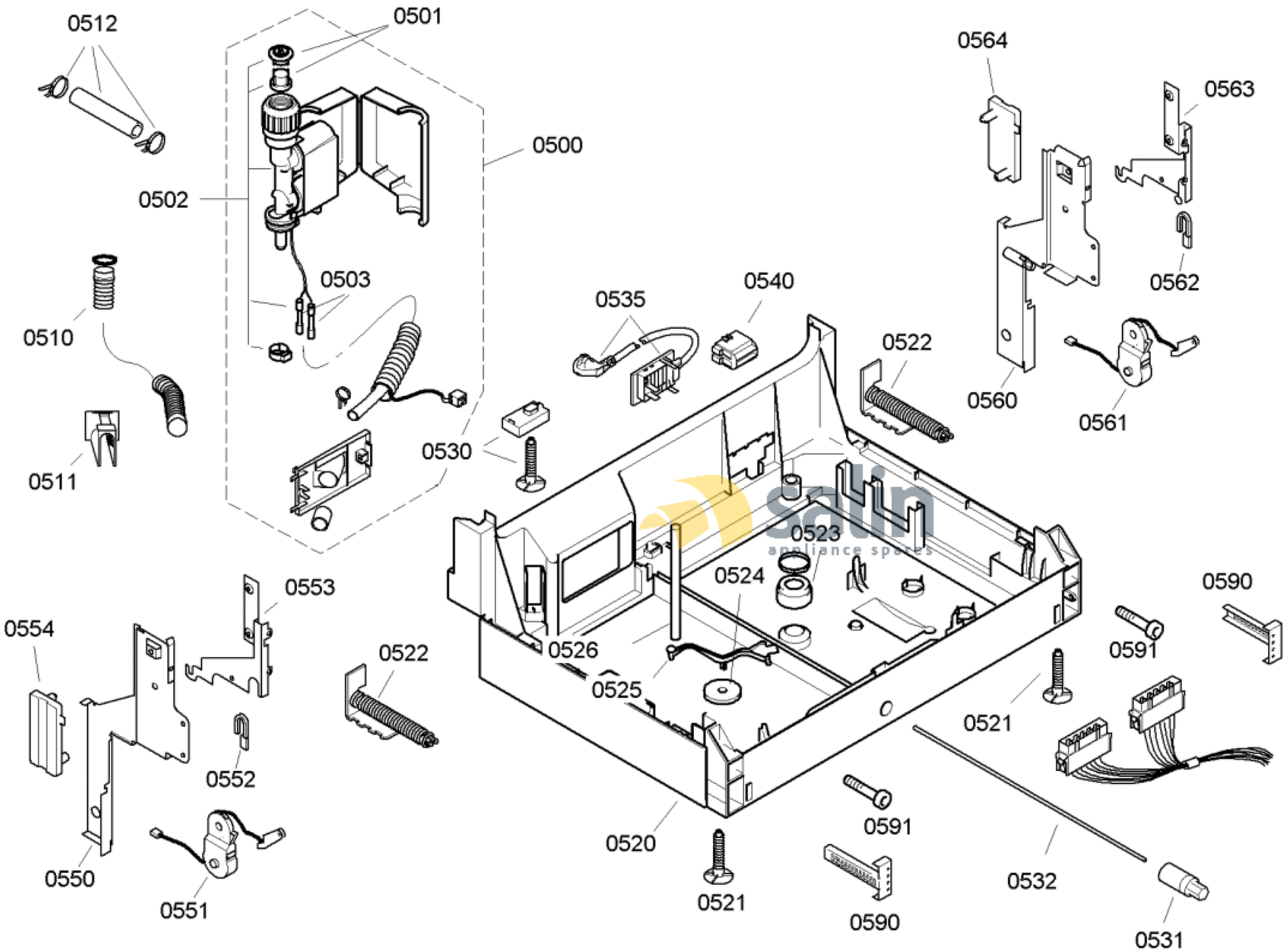

58300000114223 aet 000 c 5/6

FAMILY : SGV45M53EU

MODEL NO: SGV45M53EU/86

Check Position No/Part No or Replacement No

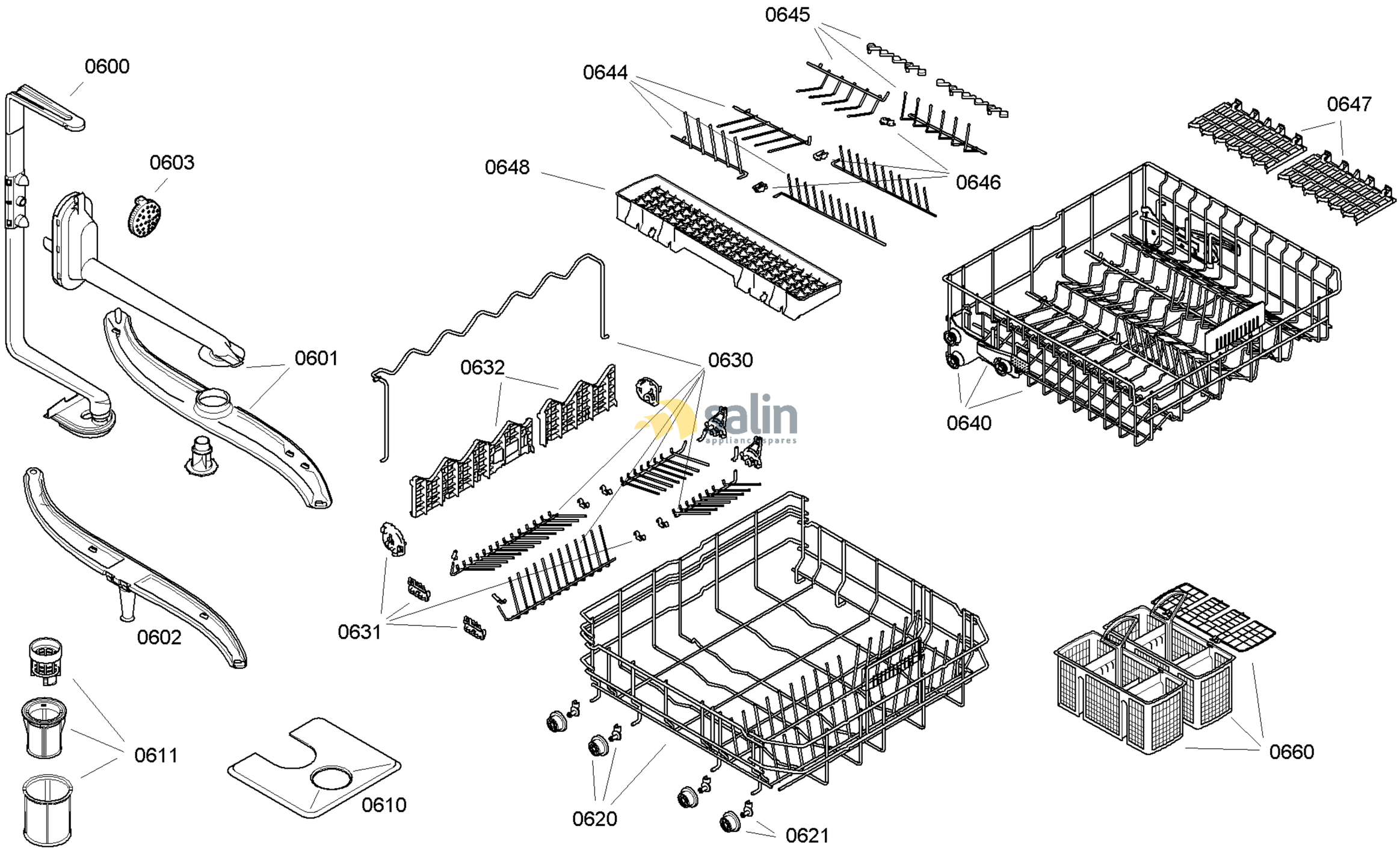

58300000114223 aet 000 c 6/6

FAMILY : SGV45M53EU
MODEL NO: SGV45M53EU/86
Check Position No/Part No or Replacement No