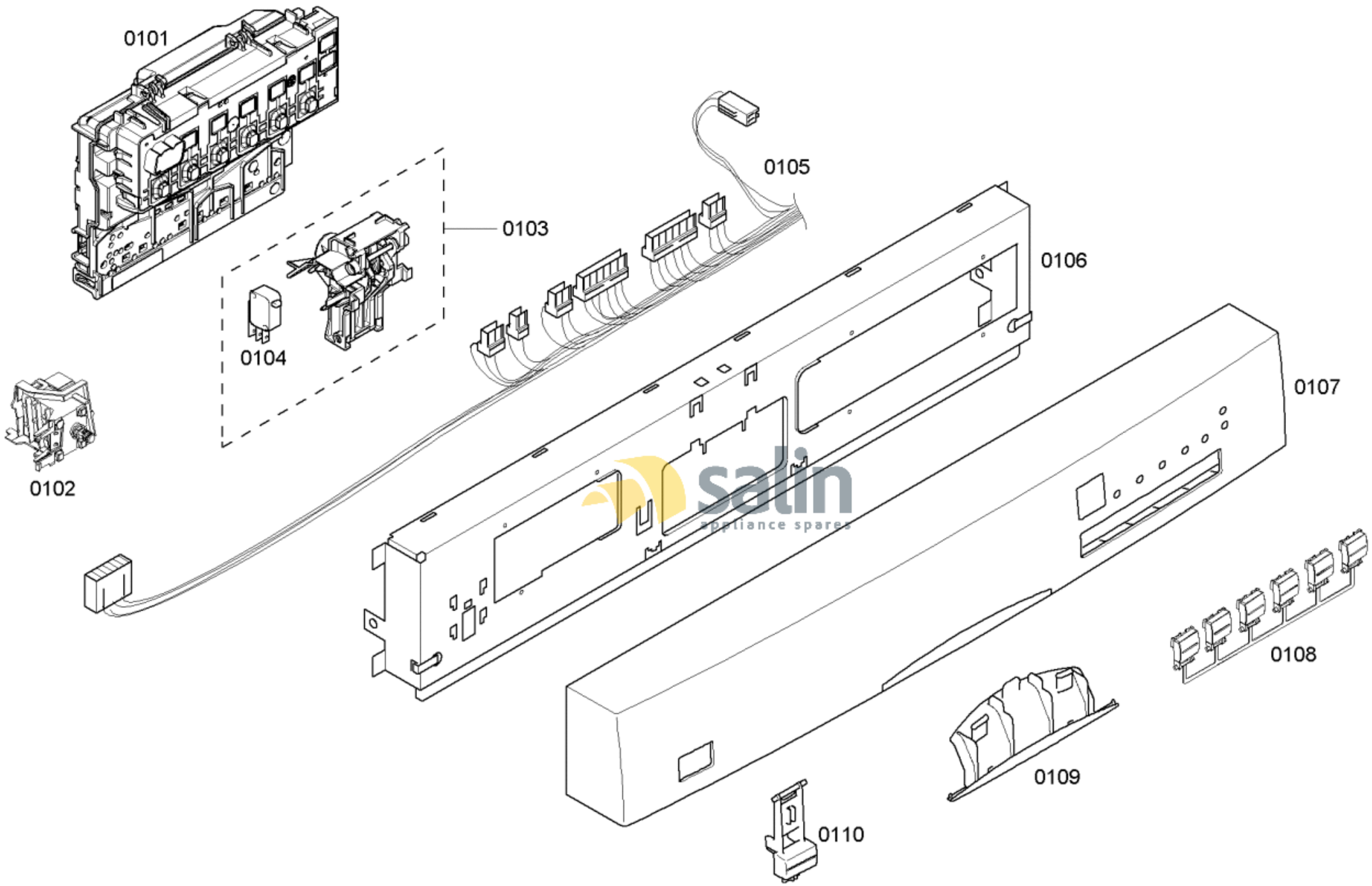

satin
appliance spares

58300000119843 aet 000 b 1/6

FAMILY : SHE46C05UC

MODEL NO: SHE46C05UC/36

Check Position No/Part No or Replacement No

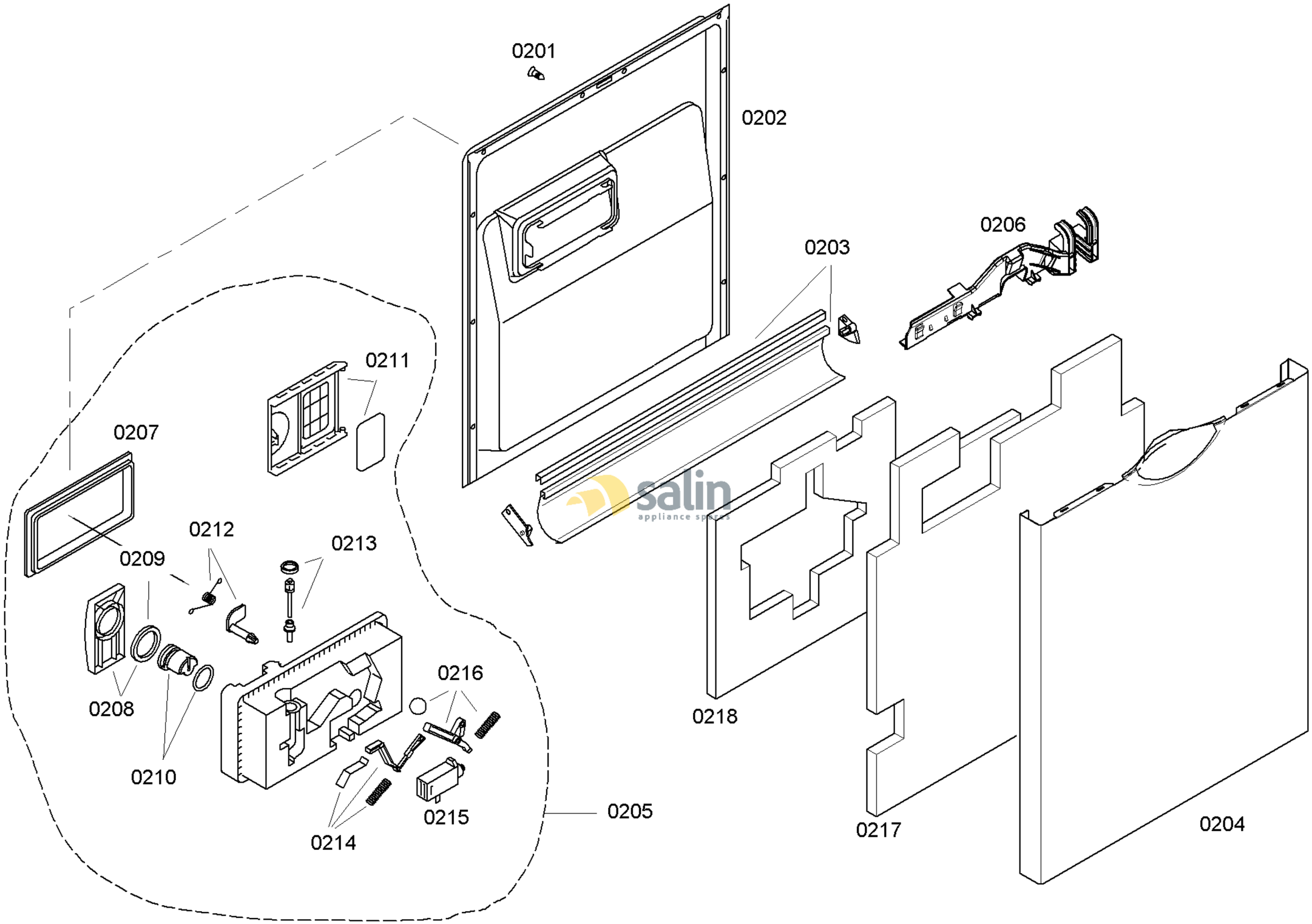

58300000119843 aet 000 b 2/6

FAMILY : SHE46C05UC
MODEL NO: SHE46C05UC/36
Check Position No/Part No or Replacement No

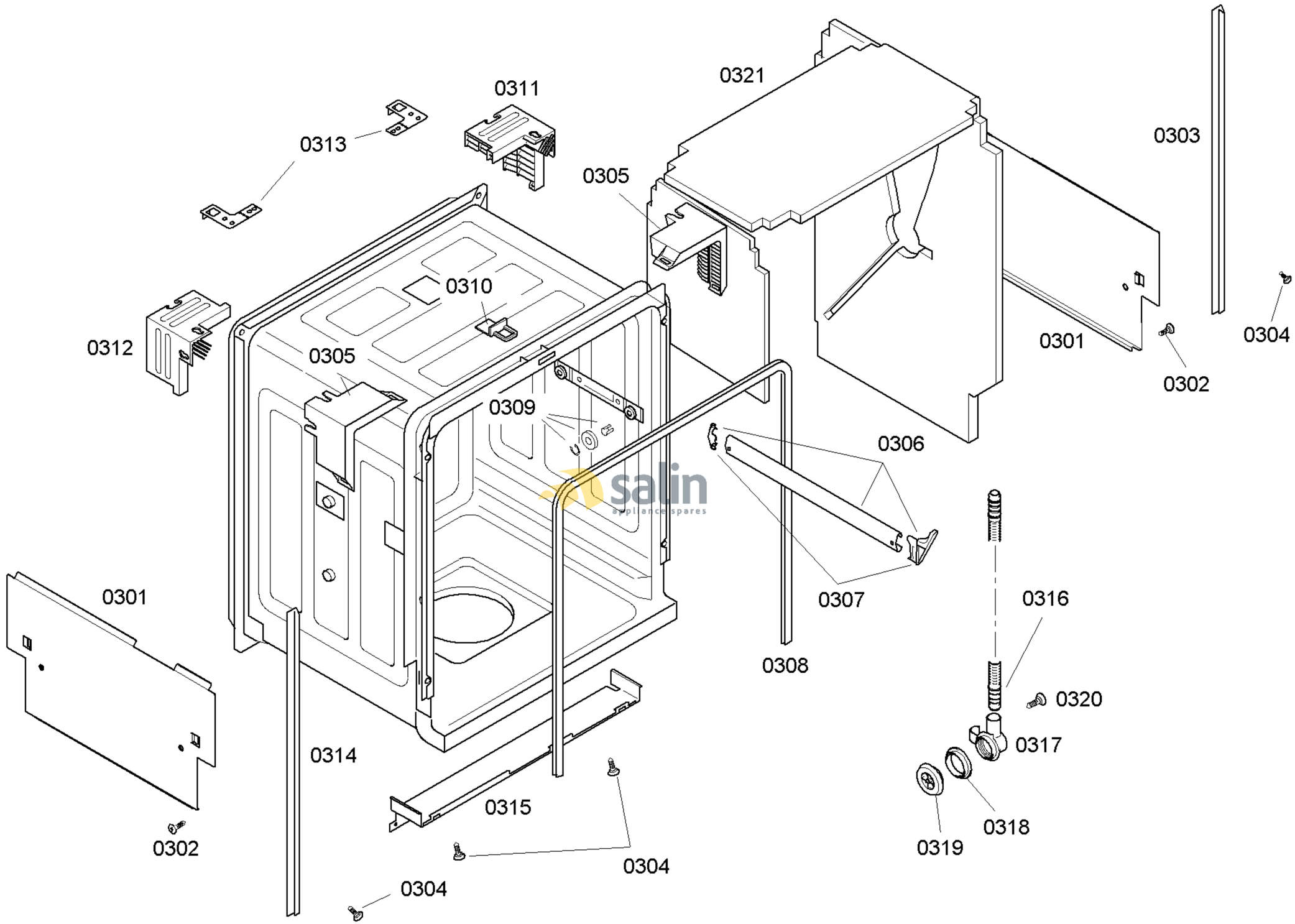

58300000119843 aet 000 b 3/6

FAMILY : SHE46C05UC
MODEL NO: SHE46C05UC/36
Check Position No/Part No or Replacement No

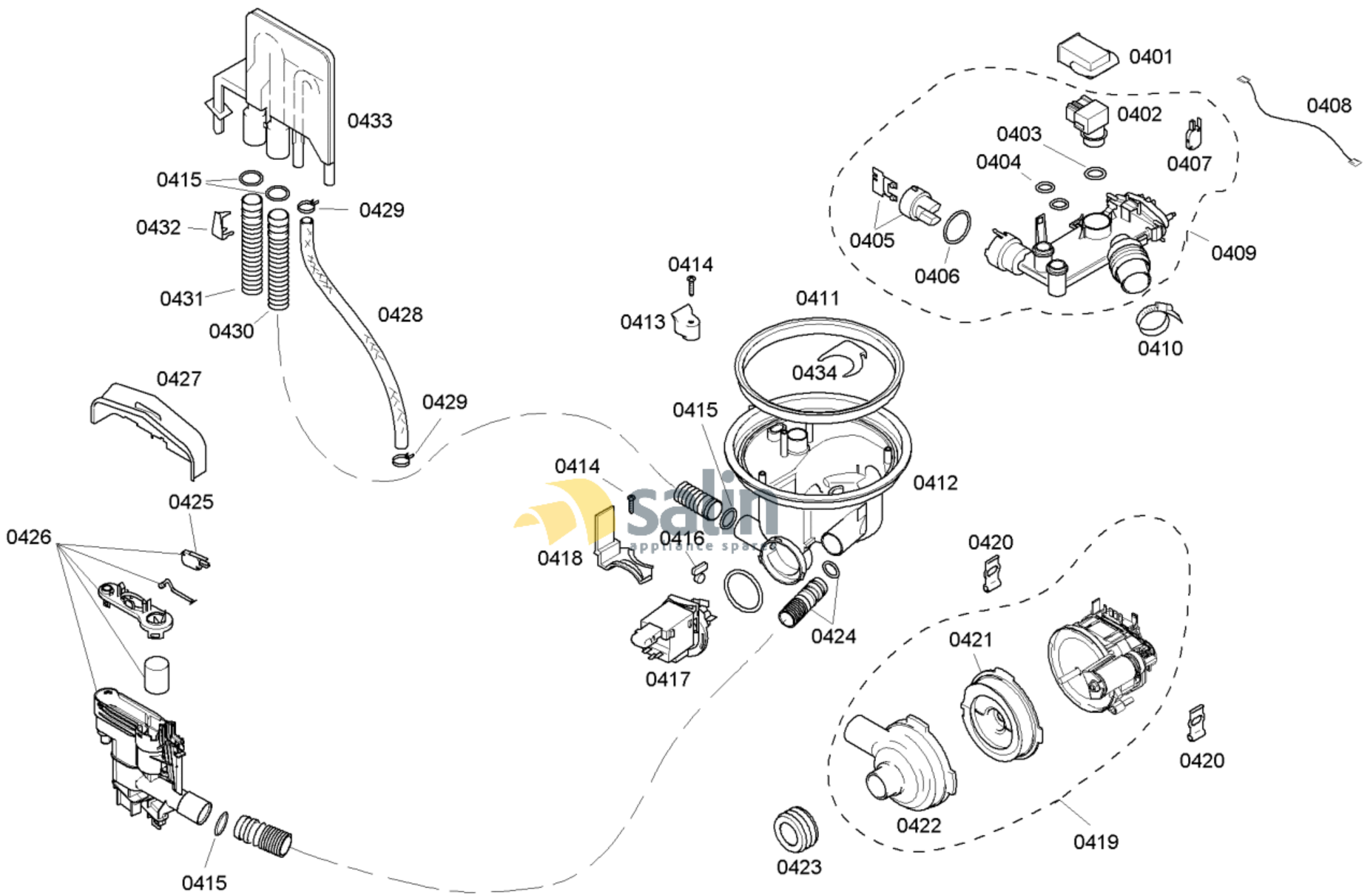

58300000119843 aet 000 b 4/6

FAMILY : SHE46C05UC

MODEL NO: SHE46C05UC/36

Check Position No/Part No or Replacement No

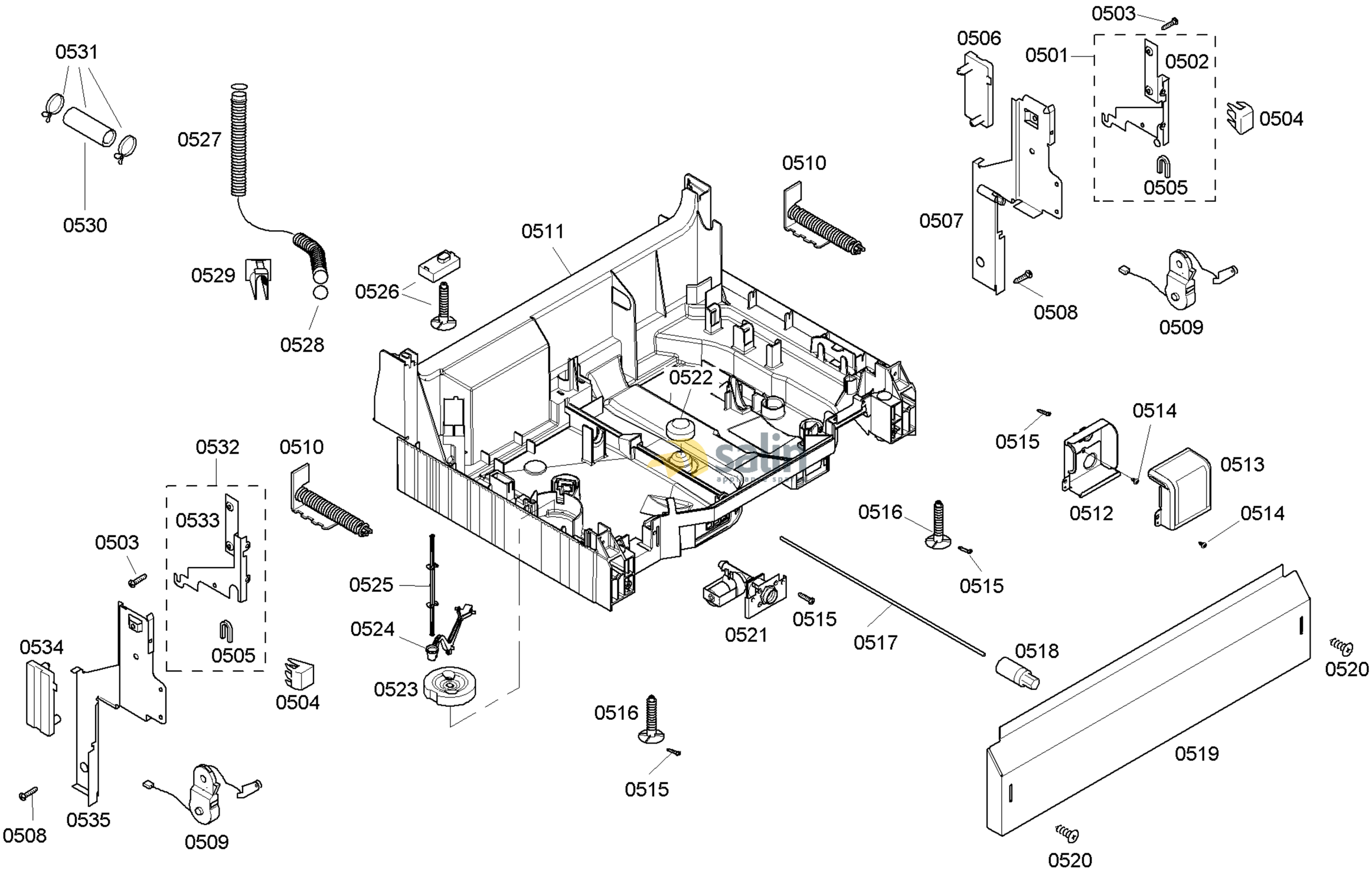

58300000119843 aet 000 b 5/6

FAMILY : SHE46C05UC
MODEL NO: SHE46C05UC/36
Check Position No/Part No or Replacement No

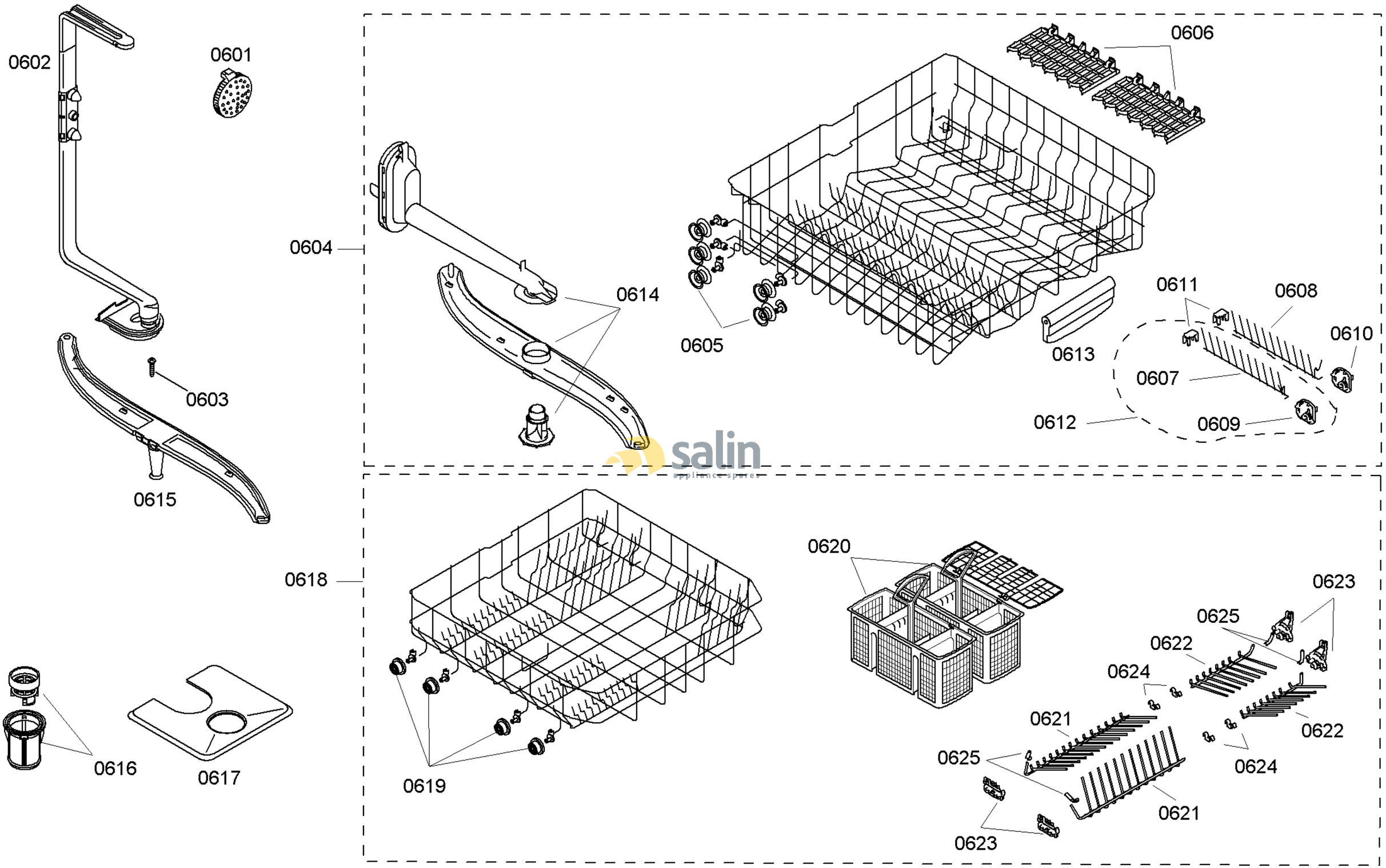

salin
appliance spares

58300000119843 aet 000 b 6/6

FAMILY : SHE46C05UC
MODEL NO: SHE46C05UC/36
Check Position No/Part No or Replacement No