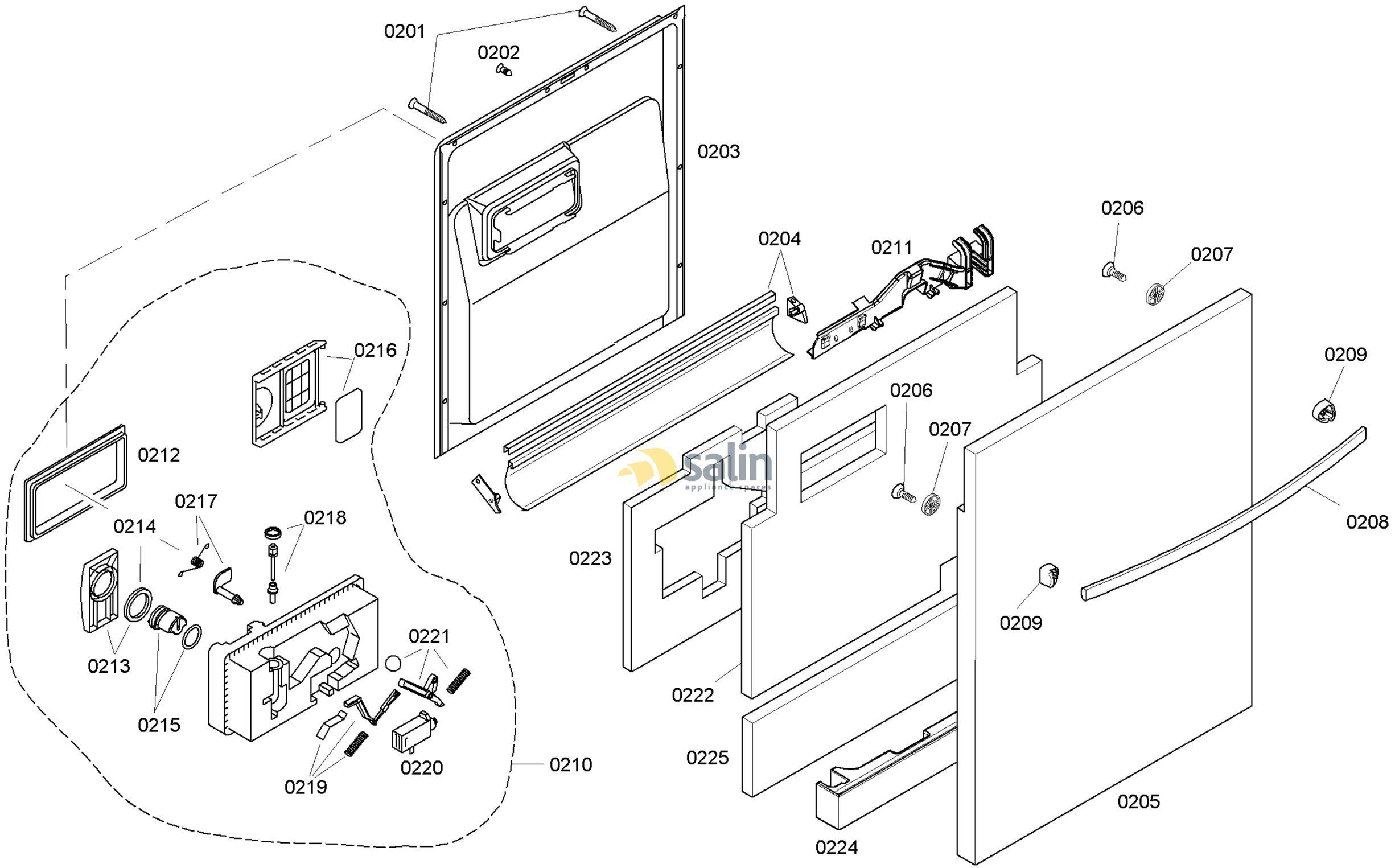


58300000126099 aet 000 b 2/6

FAMILY : SHX46A01UC
MODEL NO: SHX46A01UC/42
Check Position No/Part No or Replacement No

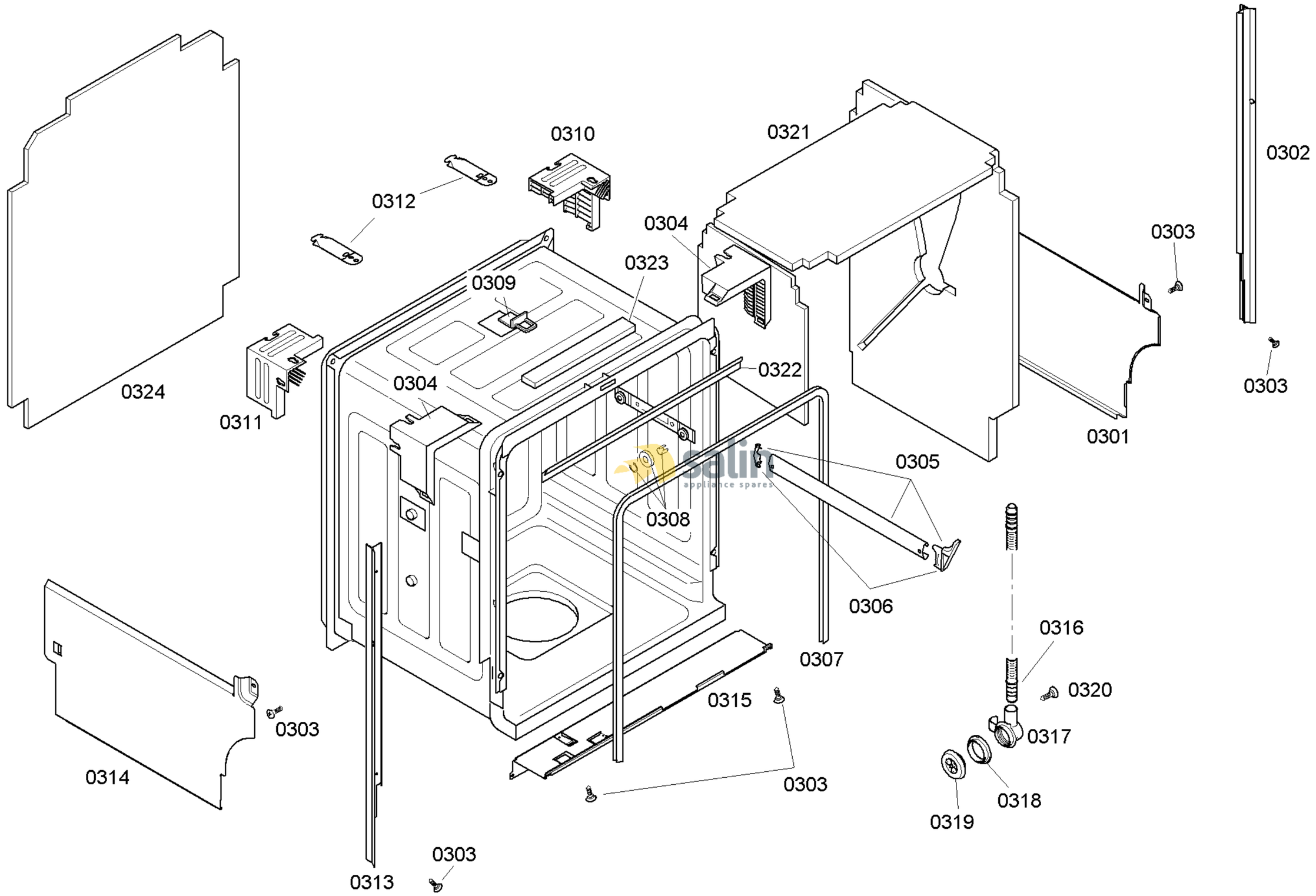


58300000126099 aet 000 b 3/6

FAMILY : SHX46A01UC
MODEL NO: SHX46A01UC/42
Check Position No/Part No or Replacement No

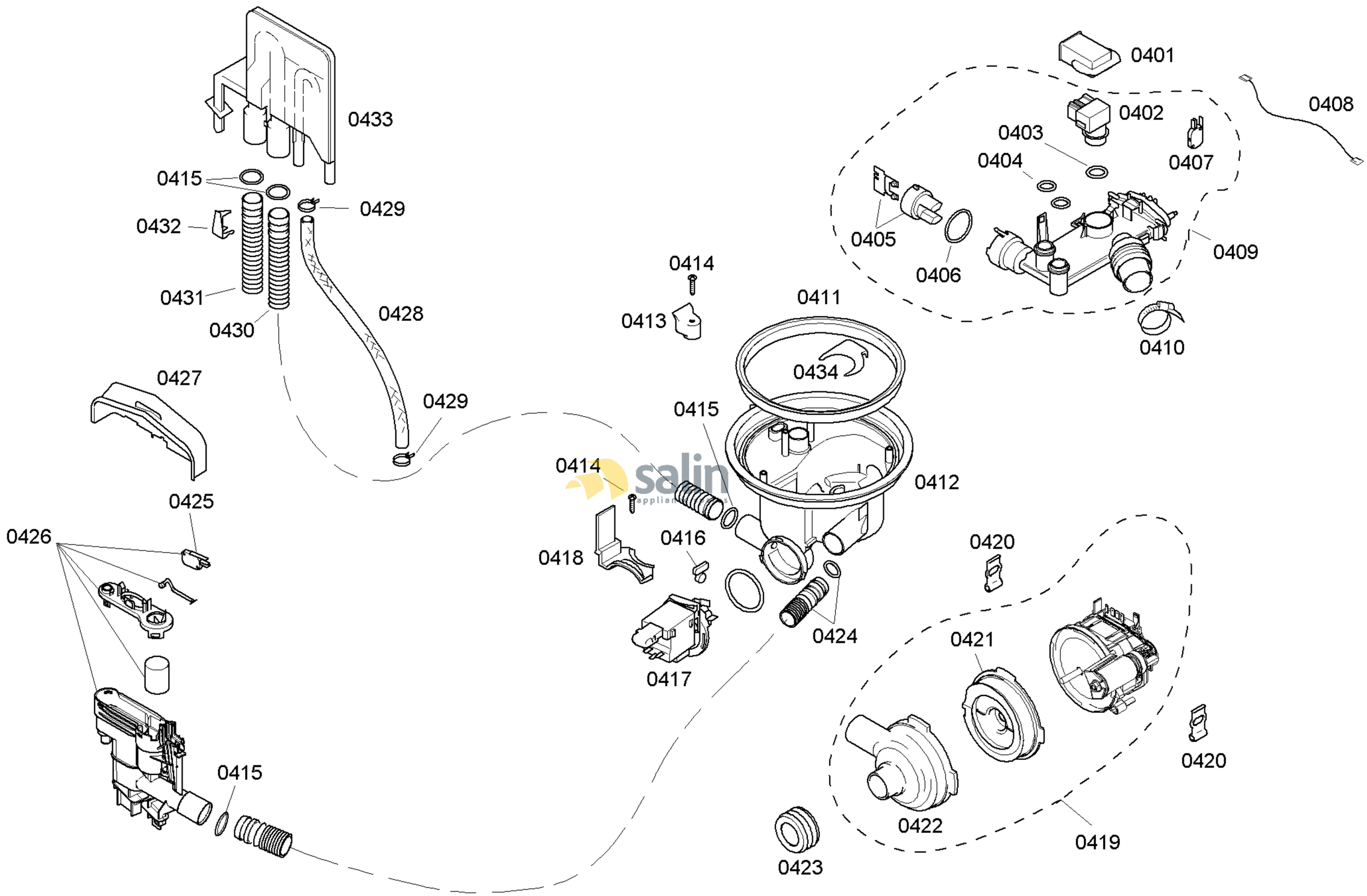


58300000126099 aet 000 b 4/6

FAMILY : SHX46A01UC
MODEL NO: SHX46A01UC/42
Check Position No/Part No or Replacement No

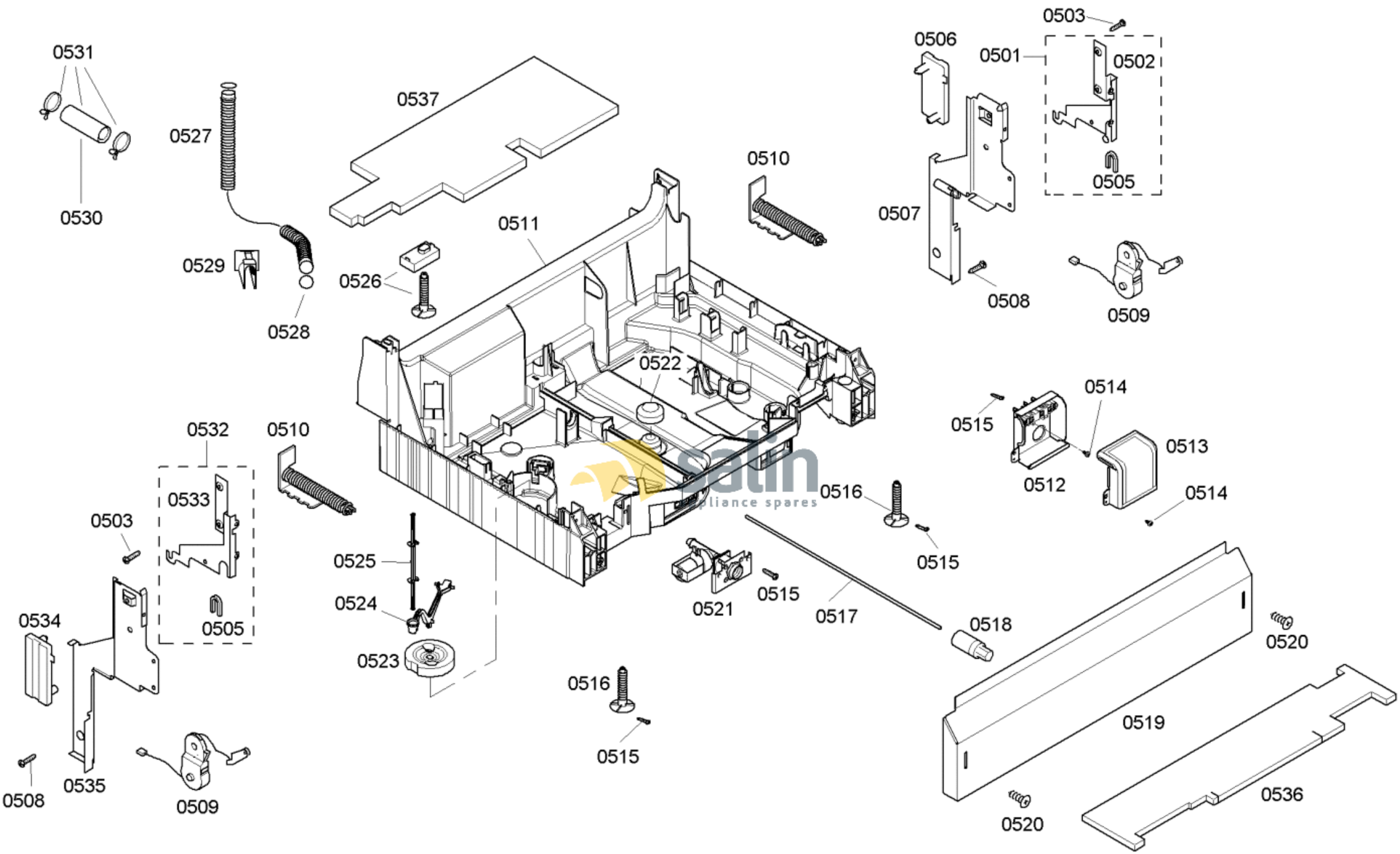


58300000126099 aet 000 b 5/6

FAMILY : SHX46A01UC

MODEL NO: SHX46A01UC/42

Check Position No/Part No or Replacement No

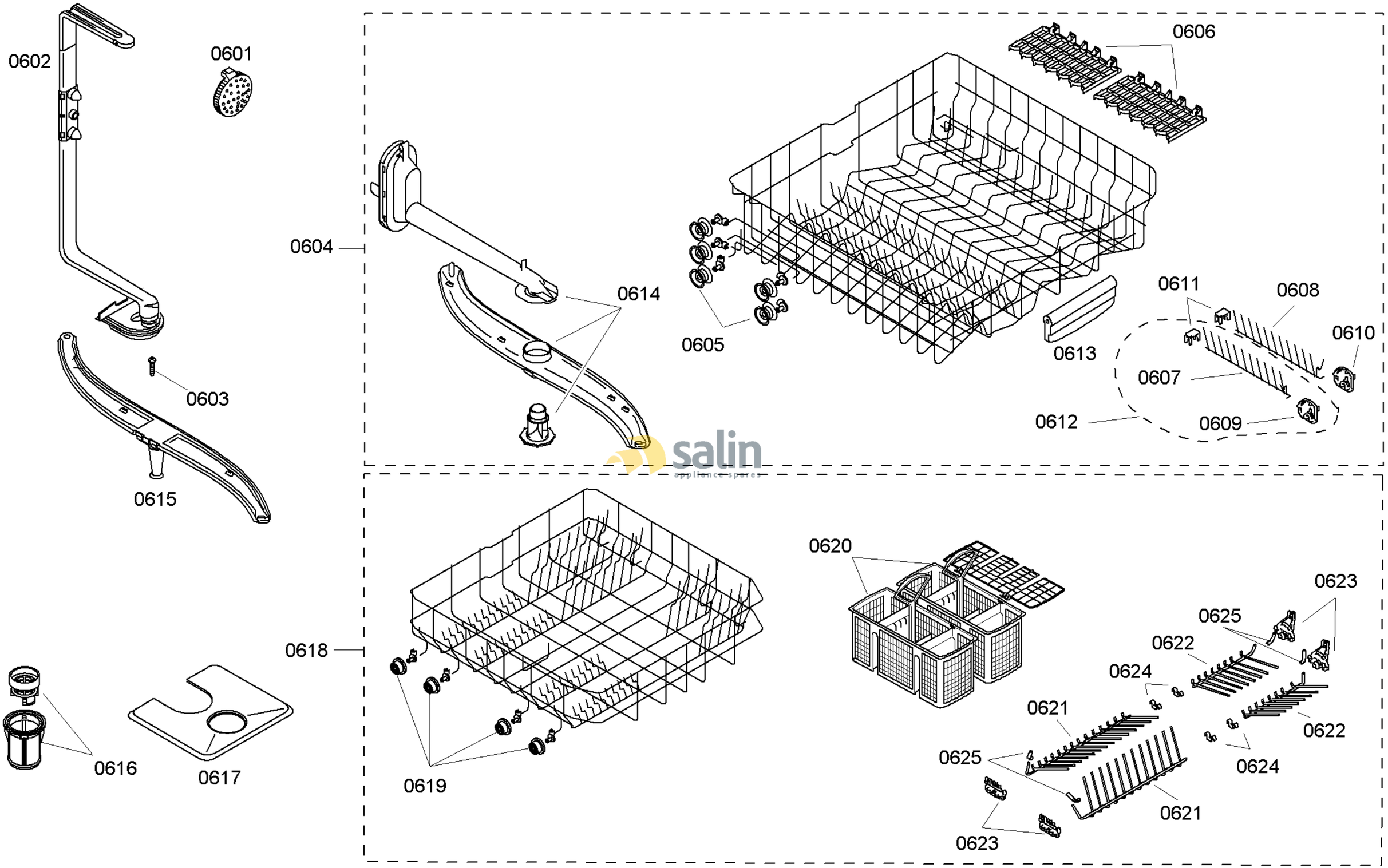


salin
appliance spares

58300000126099 aet 000 b 6/6

FAMILY : SHX46A01UC
MODEL NO: SHX46A01UC/42
Check Position No/Part No or Replacement No