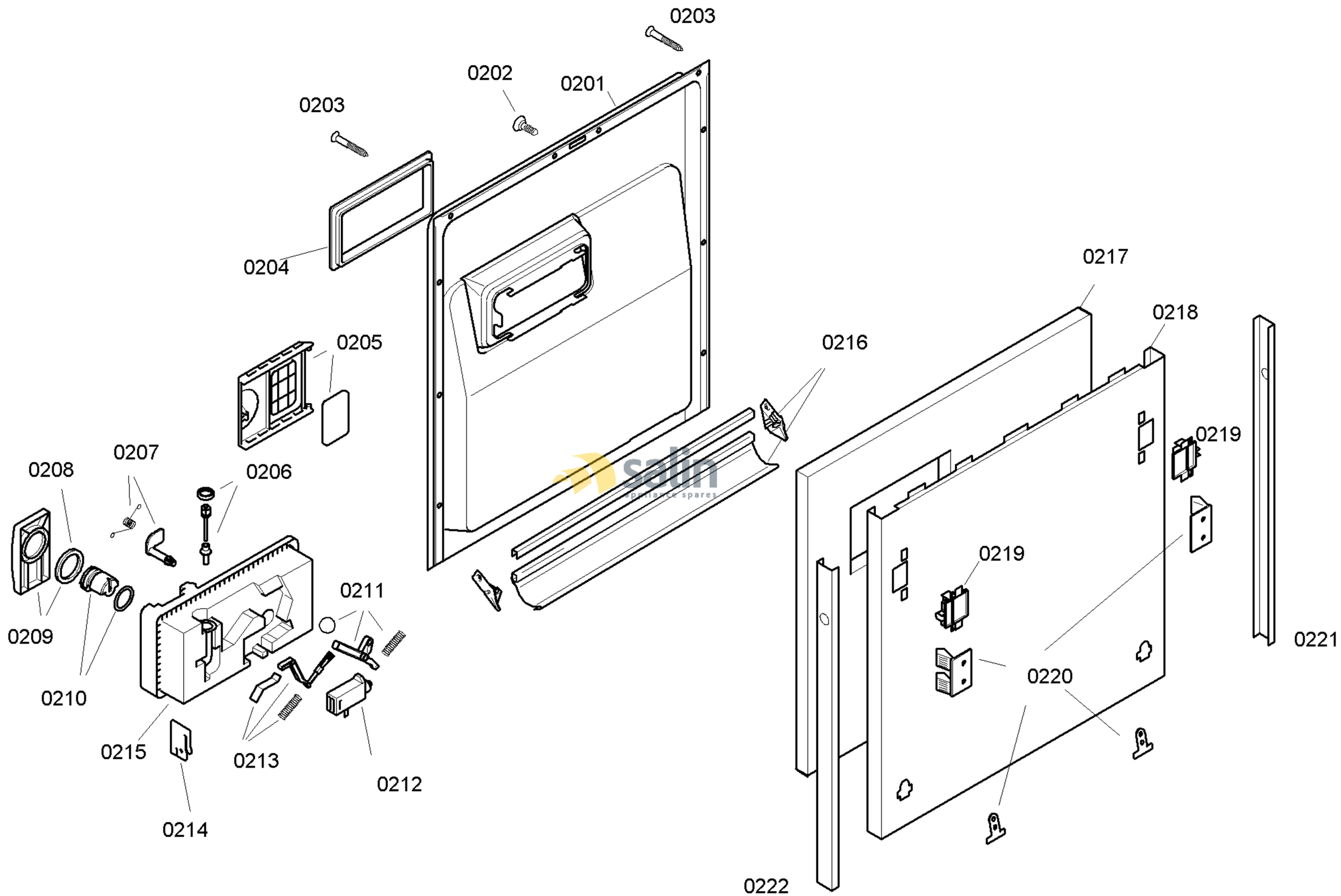

58300000109007 aet 000 b 2/6

FAMILY : SGI45M02EU
MODEL NO: SGI45M02EU/52
Check Position No/Part No or Replacement No

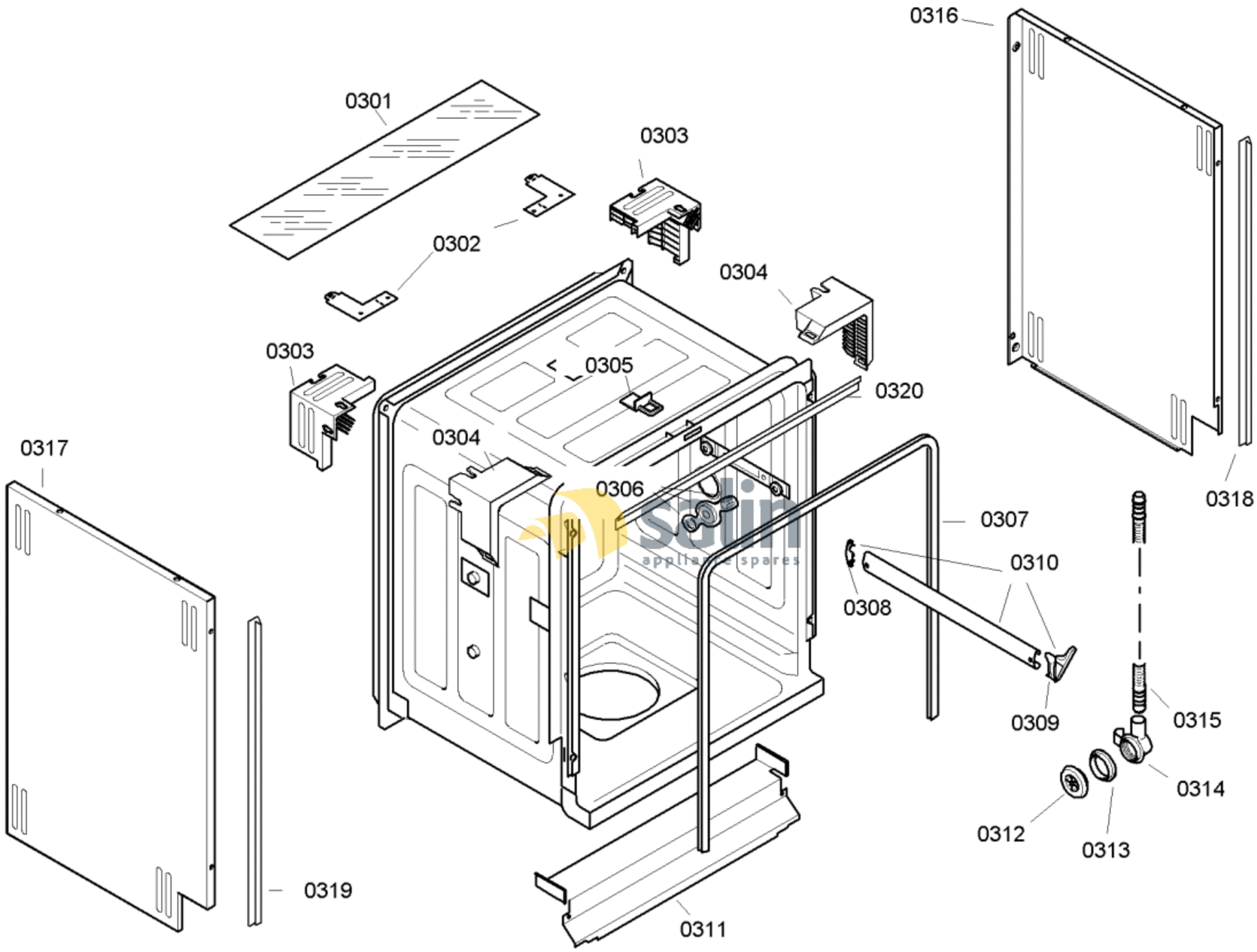

58300000109007 aet 000 b 3/6

FAMILY : SGI45M02EU

MODEL NO: SGI45M02EU/52

Check Position No/Part No or Replacement No

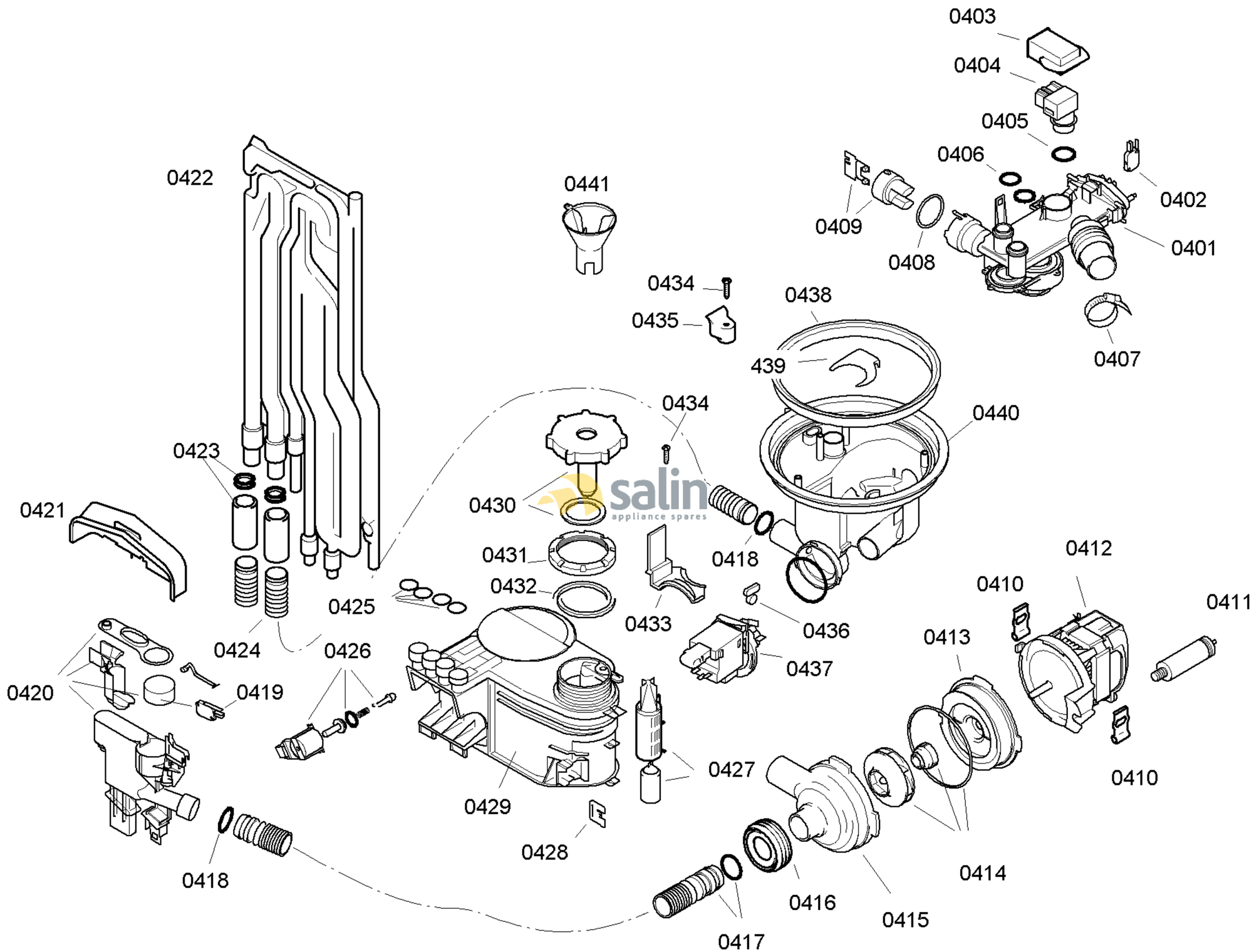

58300000109007 aet 000 b 4/6

FAMILY : SGI45M02EU
MODEL NO: SGI45M02EU/52
Check Position No/Part No or Replacement No

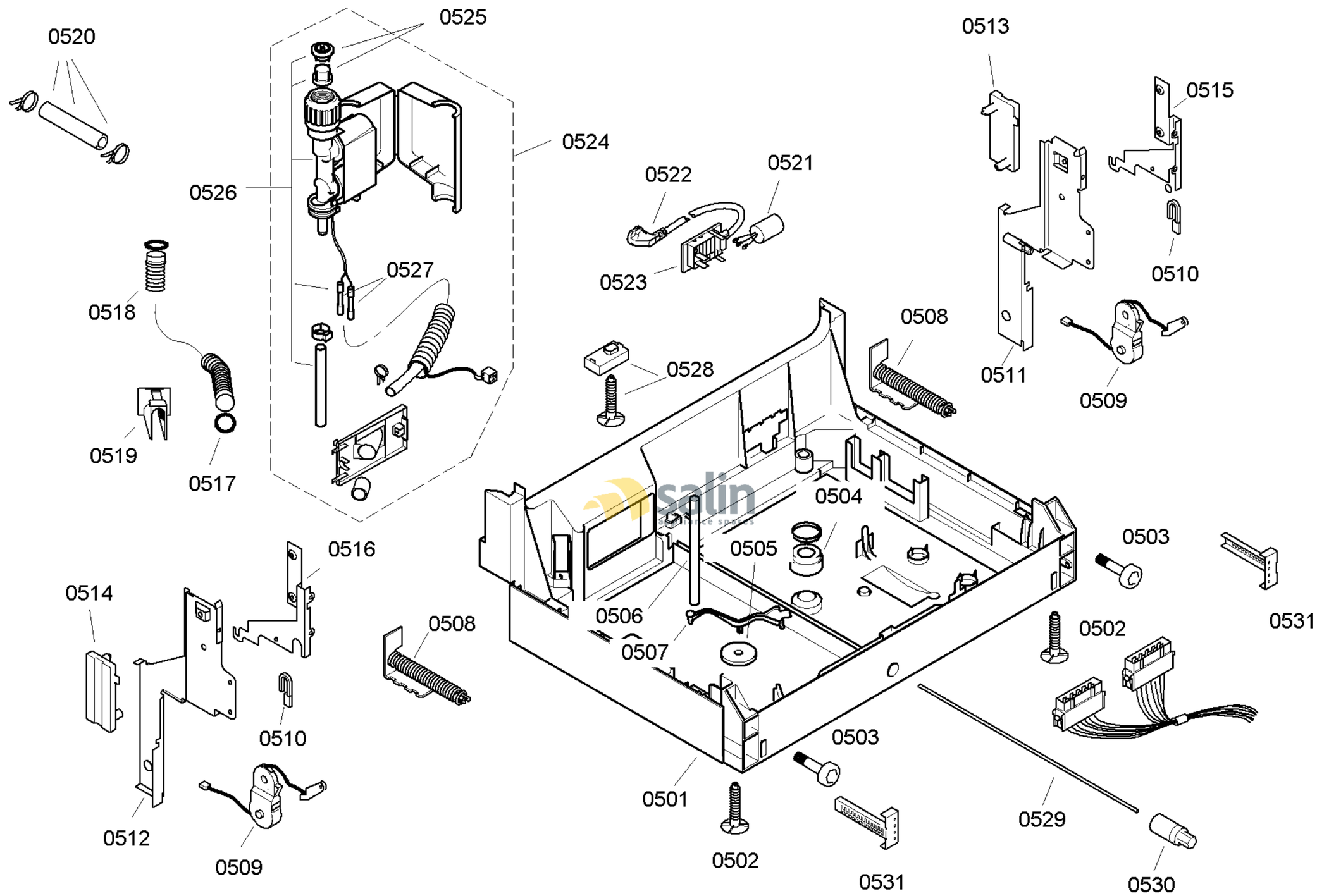

58300000109007 aet 000 b 5/6

FAMILY : SGI45M02EU
MODEL NO: SGI45M02EU/52
Check Position No/Part No or Replacement No