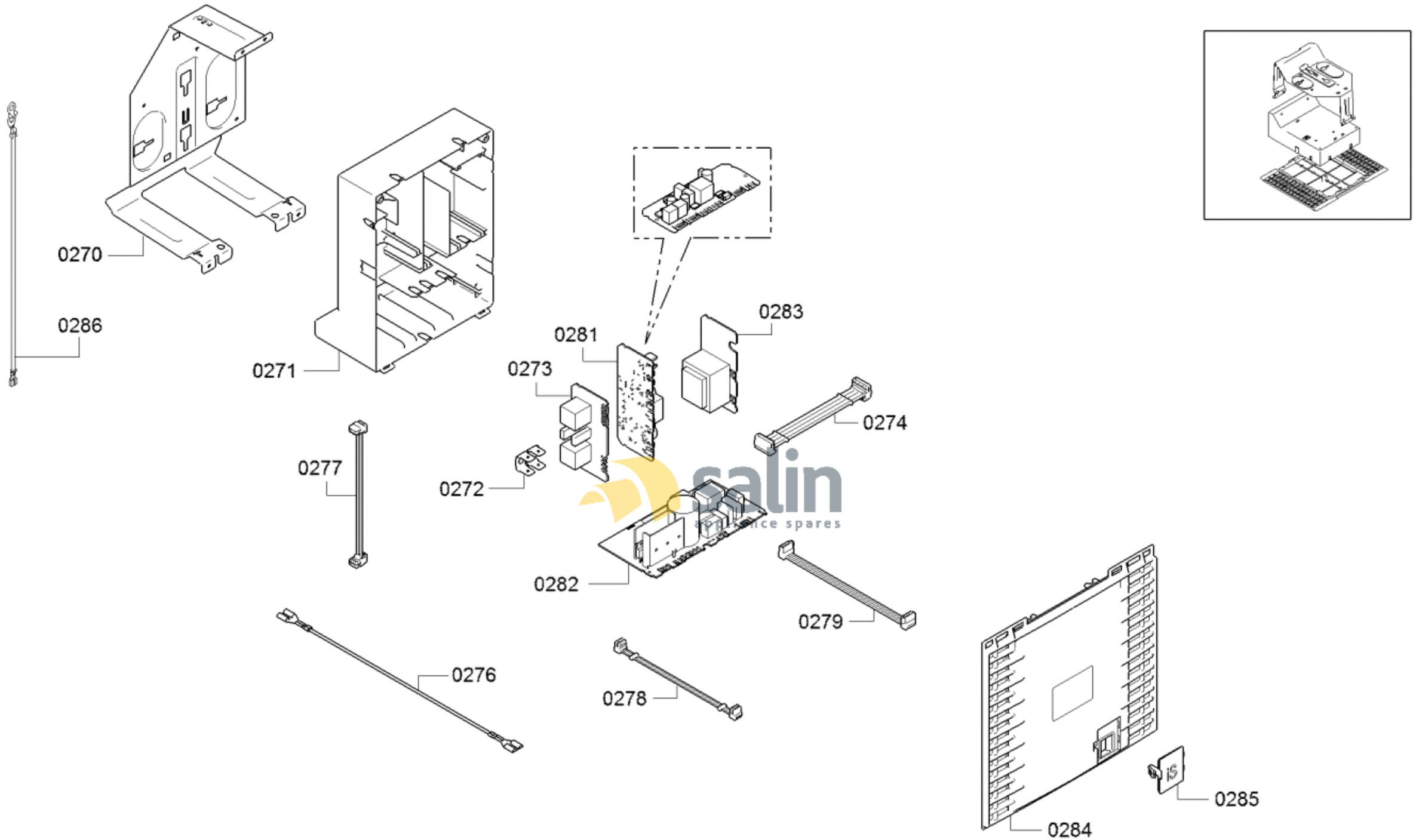

58300000210257 aet 000 a 2/3

FAMILY : DWB68JQ50B

MODEL NO: DWB68JQ50B/01

Check Position No/Part No or Replacement No

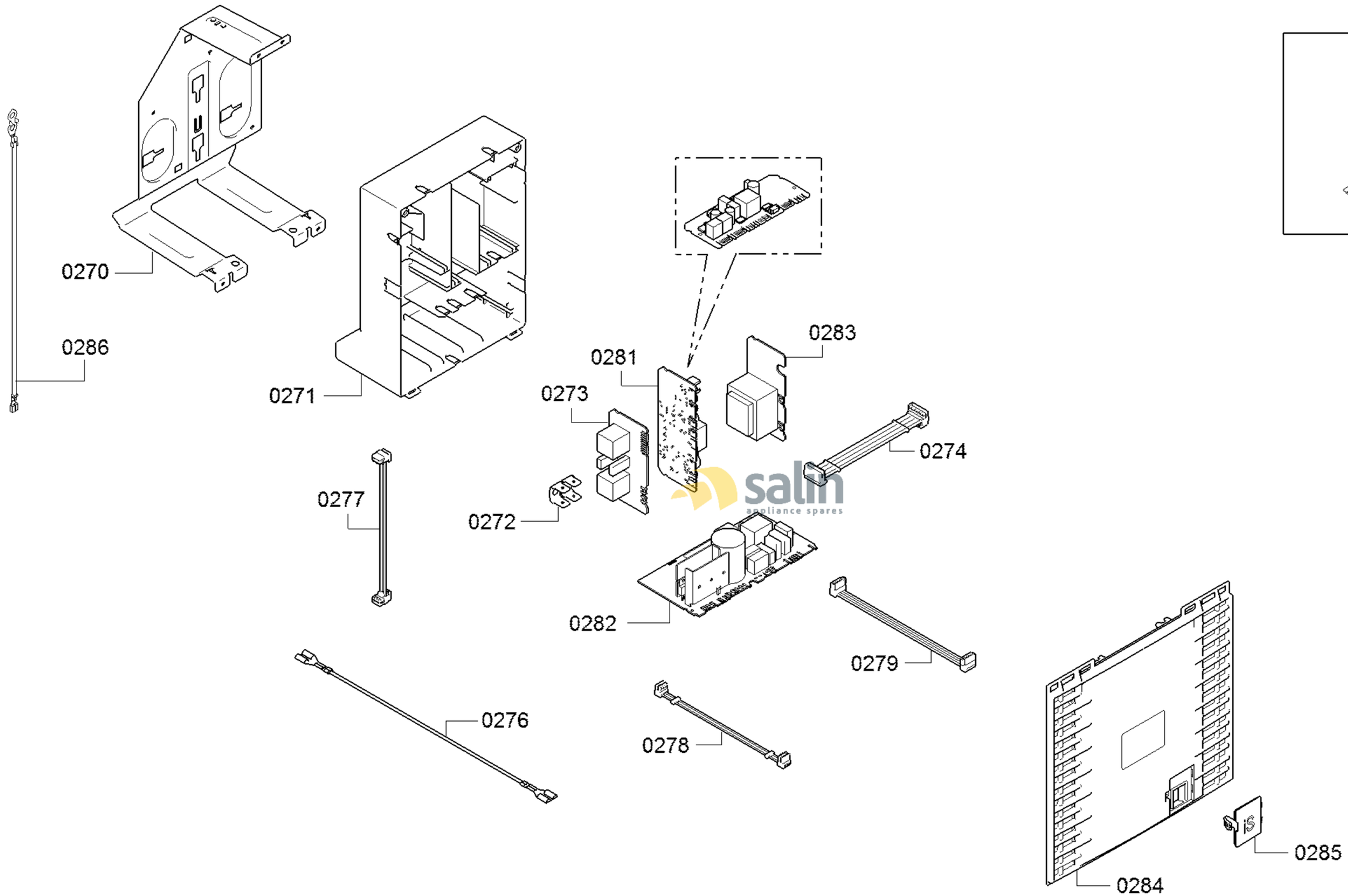

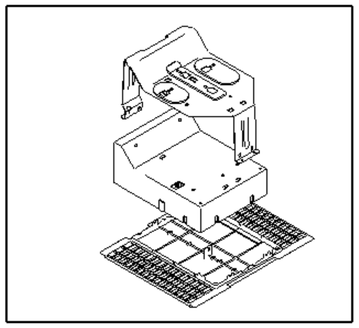

58300000210257 aet 000 c 2/3

FAMILY : DWB68JQ50B
MODEL NO: DWB68JQ50B/01
Check Position No/Part No or Replacement No

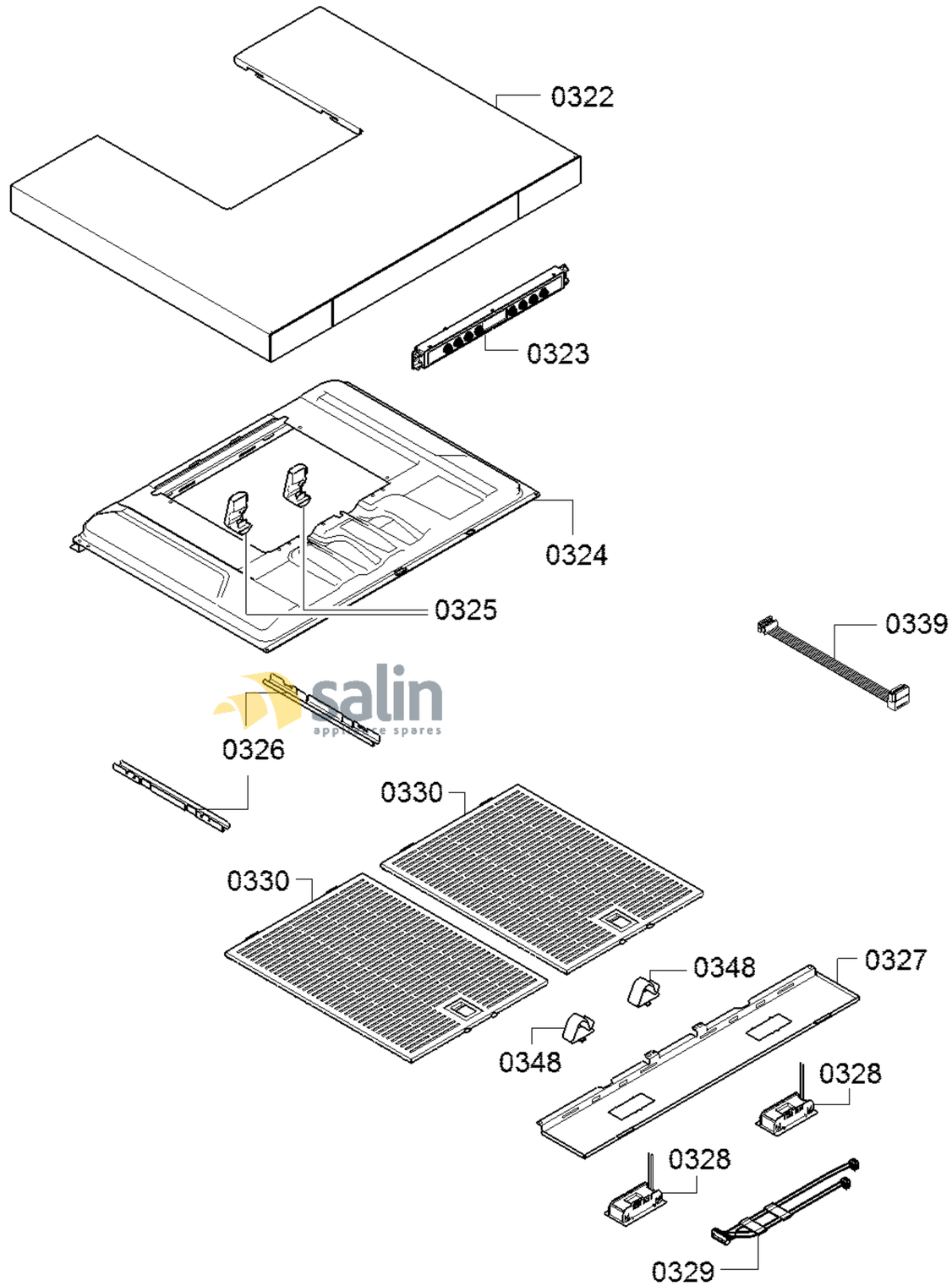

58300000210257 aet 000 a 3/3

FAMILY : DWB68JQ50B
MODEL NO: DWB68JQ50B/01
Check Position No/Part No or Replacement No

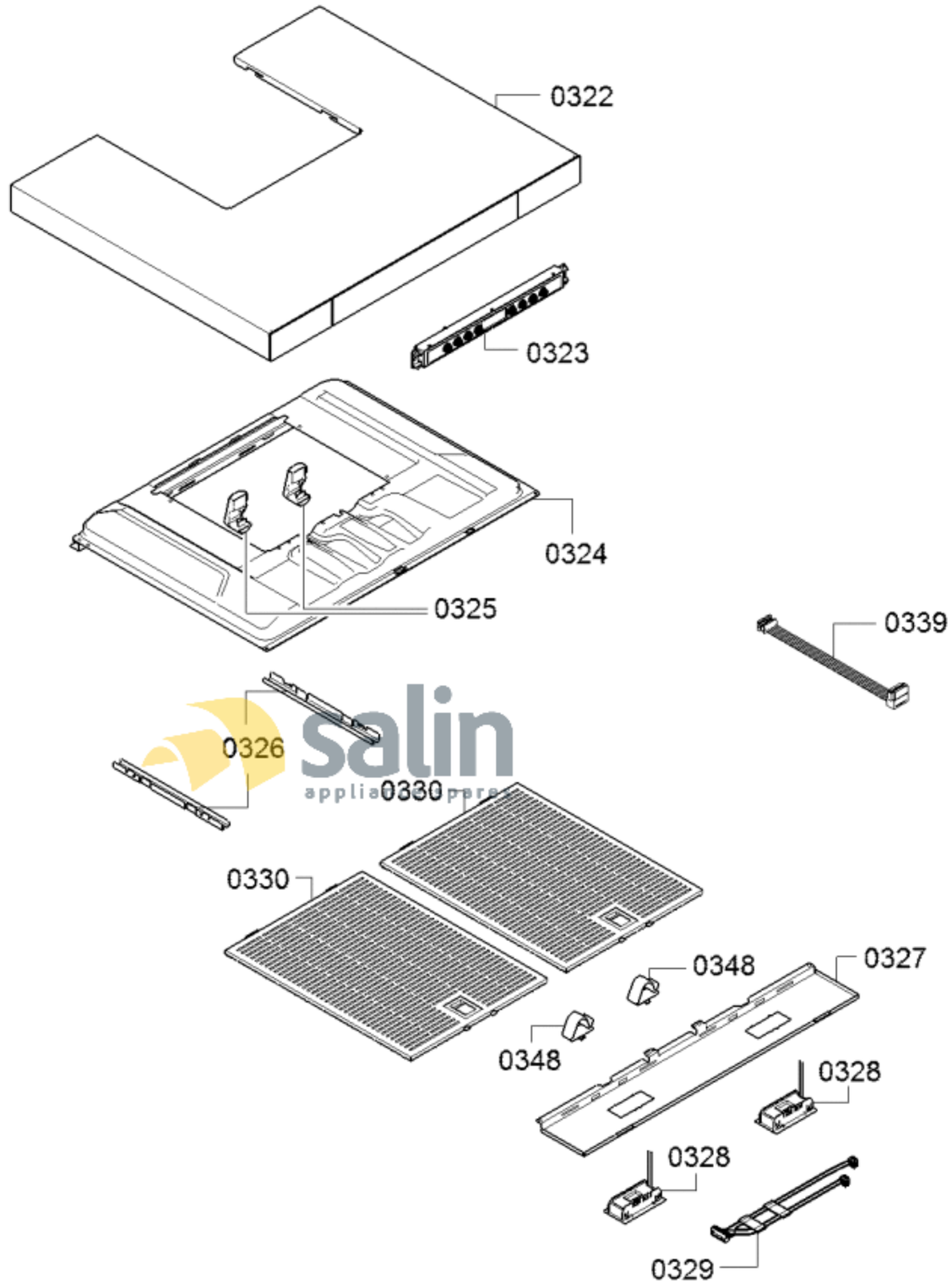

58300000210257 aet 000 c 3/3

FAMILY : DWB68JQ50B

MODEL NO: DWB68JQ50B/01

Check Position No/Part No or Replacement No