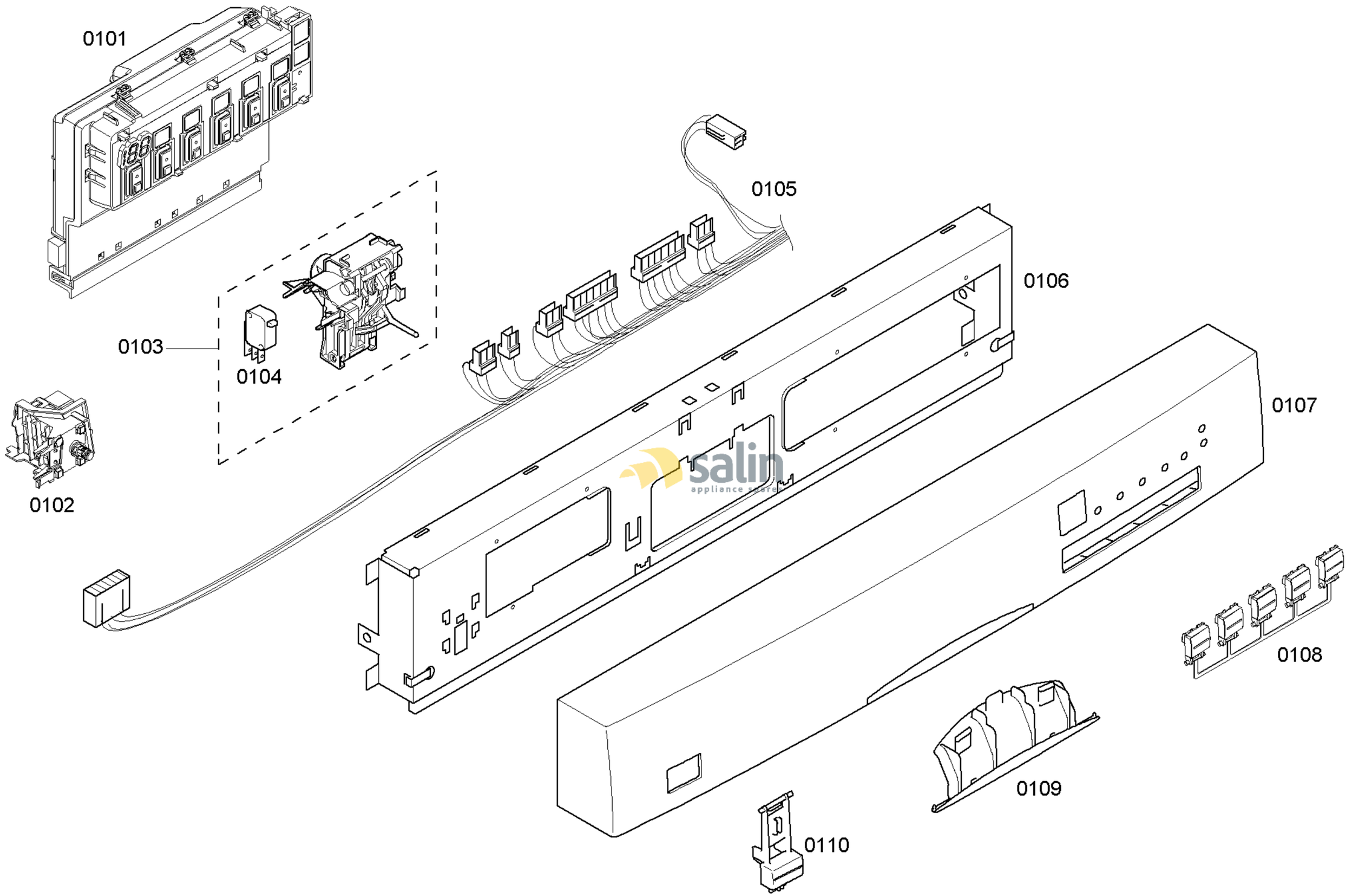

58300000111836 aet 000 c 1/6

FAMILY : SHE46C02UC
MODEL NO: SHE46C02UC/17
Check Position No/Part No or Replacement No

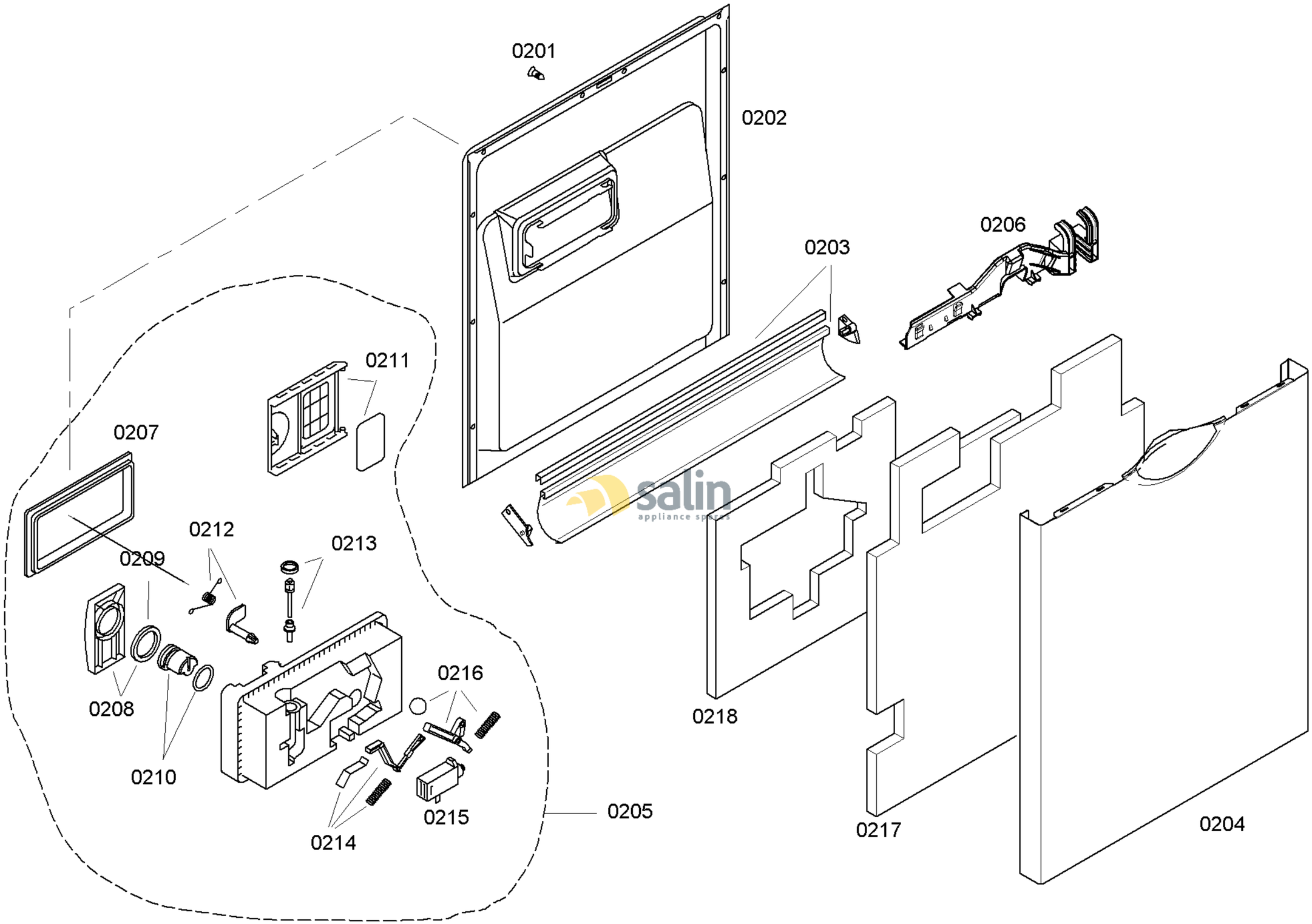

58300000111836 aet 000 c 2/6

FAMILY : SHE46C02UC
MODEL NO: SHE46C02UC/17
Check Position No/Part No or Replacement No

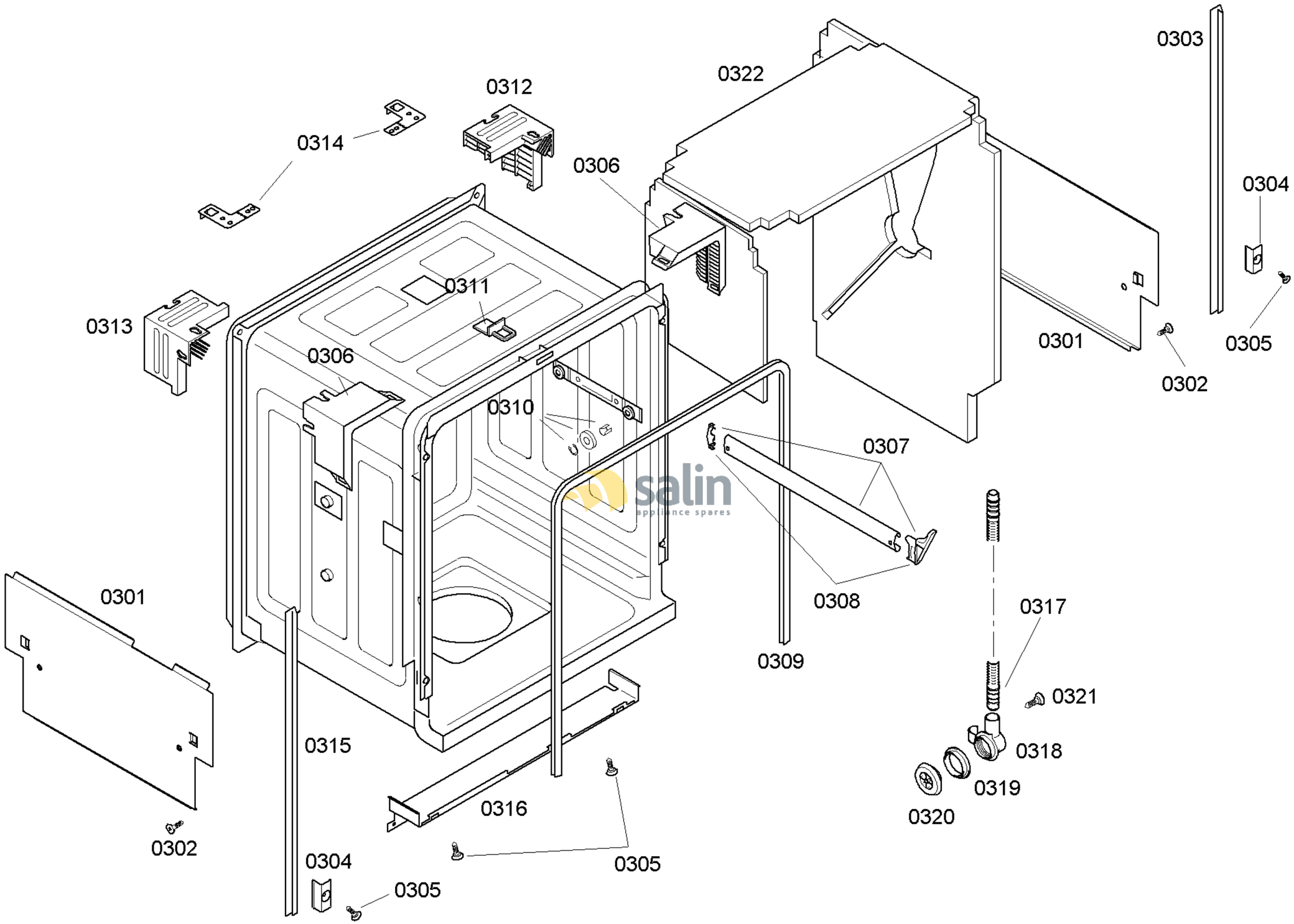

58300000111836 aet 000 c 3/6

FAMILY : SHE46C02UC
MODEL NO: SHE46C02UC/17
Check Position No/Part No or Replacement No

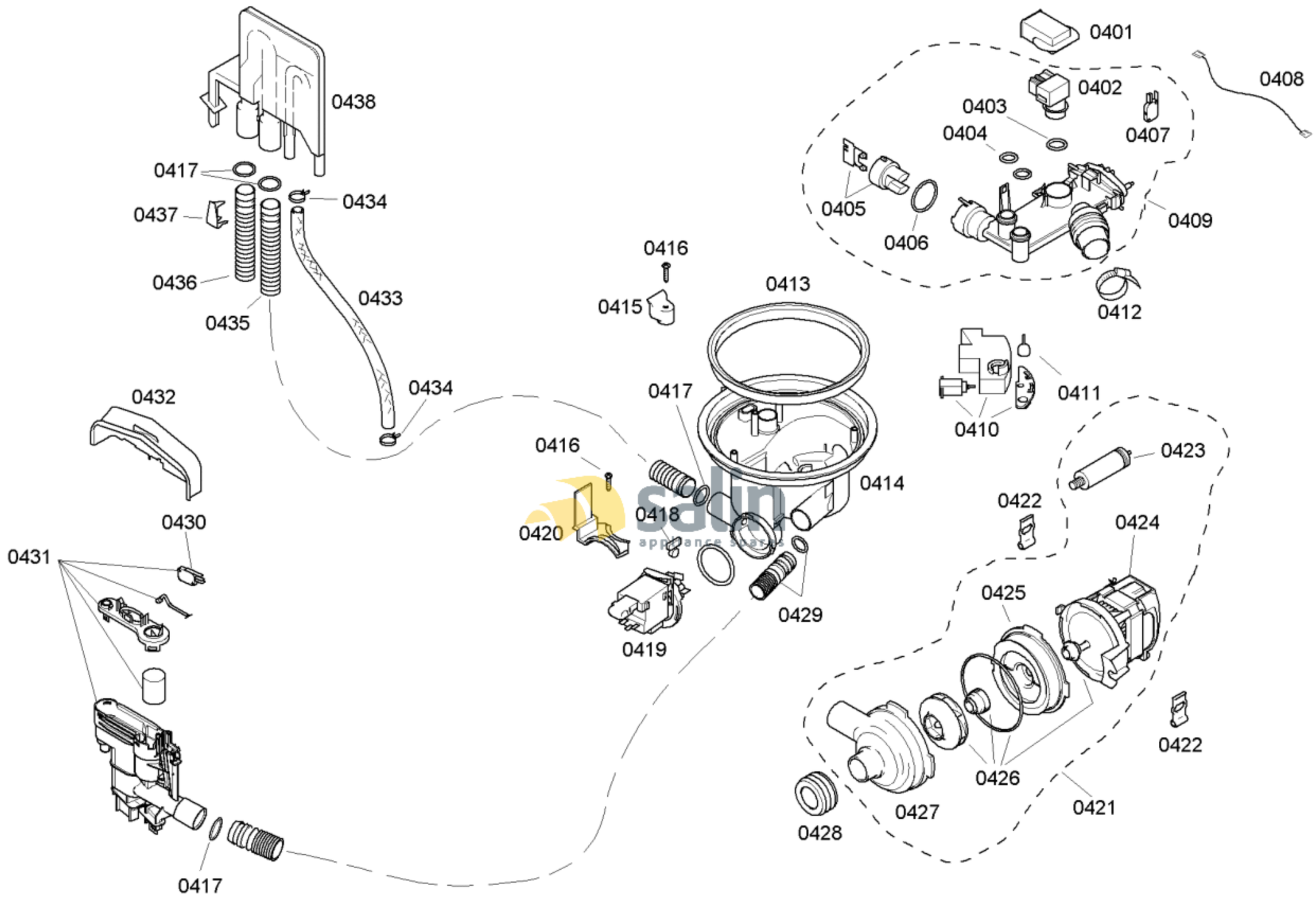

58300000111836 aet 000 c 4/6

FAMILY : SHE46C02UC

MODEL NO: SHE46C02UC/17

Check Position No/Part No or Replacement No

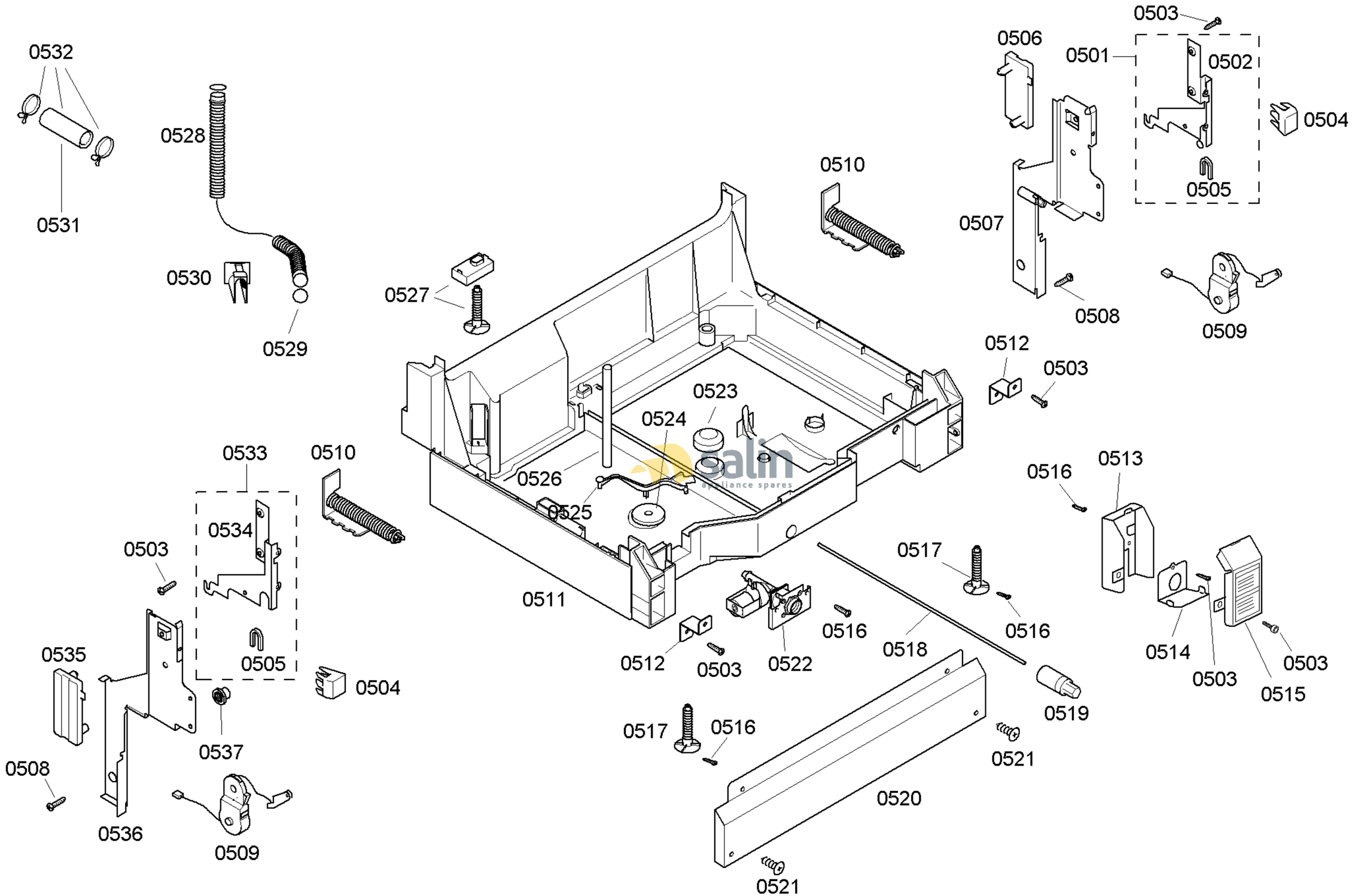

58300000111836 aet 000 c 5/6

FAMILY : SHE46C02UC
MODEL NO: SHE46C02UC/17
Check Position No/Part No or Replacement No

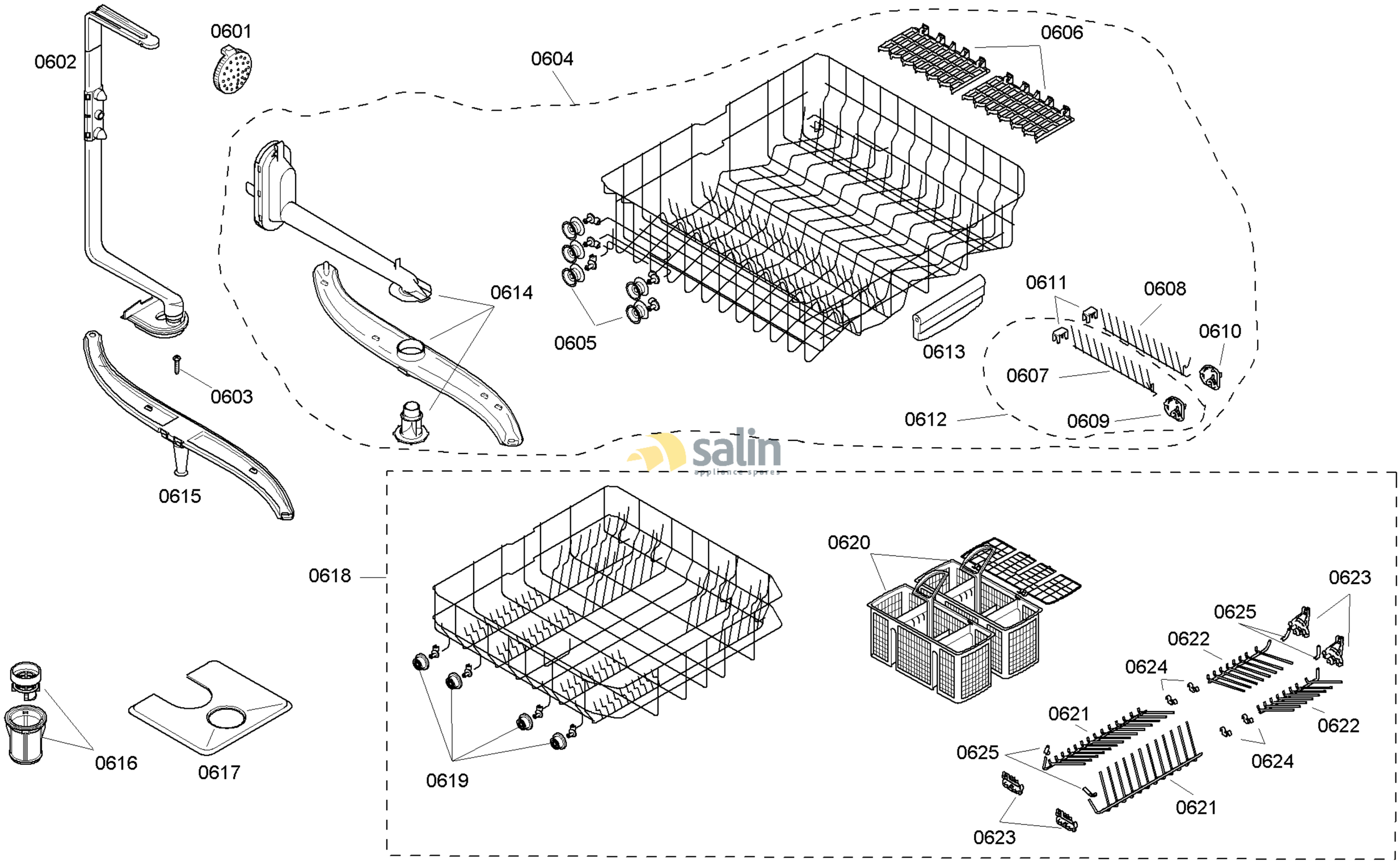

58300000111836 aet 000 c 6/6

FAMILY : SHE46C02UC
MODEL NO: SHE46C02UC/17
Check Position No/Part No or Replacement No